AllianceMotori

HEAVY INDUSTRY
ELECTRIC MOTOR

Slip Ring Motor
A-YRKK SERIES

www.alliancemotori.com

Slip Ring Motor - A-YRKK

Summarize

YR, YRKK, YRKS Series 10000V Slip Ring High Voltage Three Phase Asynchronous Motor [H450-630mm), 6000V Slip Ring High Voltage Three Phase Asynchronous Motor (H450-630mm) are general series product which our company recently promoted, its structure is reasonable, with advanced techniques, high effciency, low noise, slight vibrates, reliable performance, easy installation and convenient maintanence, which is the ideal drive for variety of industrial fields.

Frame Advantages:

The electric motor power rank, mounting dimensions and electrical specification all conform to national standards GB755 and the IEC standard.

The electric motor uses the box-type structure, its seats uses welded steel plate with light weight and good rigidity.

The YR series uses natural ventilation cooling, protection cap has been fixed on the top of the seats which is disassembled conveniently, with the advantage for the electric motor service.

YRKK series is totally enclosed type with air to air cooler af the top of the motor. YRKS series is totally enclosed type with

air to water cooler at the top of the motor. • The stator winding uses F Class heat-resisting insulation material, the ends bind reliably, have the good insulating ability and the mechanical strength after the VPI procedure.

The rotor uses wave winding. The bearing has two types rolling bearing and sliding bearing, depends on rotary speed and power of the motor.

YR and the derivation series product, commutator located outside of the motor frame, with the same cooling type as mtoor body itself.

Application

Our electric motor could be wirdely used to drive all variety of general machinery, for example: compressor, water pump, air blower, breaker, cuts the engine bed, transport machinery and other mechanical devices. It could be used to makes the prime mover in the mine, mechanical industry, power plant and other kinds of industry and mining enterprises.Pls instruct when ordering the motor uses in driving air blower, coal mill, steel rolling mill and hoist.

Standard motor specification

Voltage: 10000V,6000V,50Hz

Protection Class: YR series is IP23 (IP44 is available if uses pipeline to ventilate) YRKK, YRKS series Is IP44 or IP54.

Insulation Class: F

Working style: $1 (continuously)

Cooling method: YR series is IC01 (or IC11, IC21, IC31] YRKK series is IC611 YRKS series is IC81W

Mounting type: IMB3

Connection: Y (star type, three connectors in terminal box, terminal box is located at the right side of the motor frame viewing from the shaft entension end).

Use environment
Sea level: No more than 1000 meters
Ambient temperature: No more than 40 degree without
heavy dust, the lowest ambient Temperature is -15°C if uses rolling bearing, 5°C if uses sliding bearing.
Without corrosive and explosive gas in the air.(humid tropics or plateau area electric motor is also available.)

YRKK series 10KV IP23 (H450-630mm) IMB3 outline and mounting dimensions table

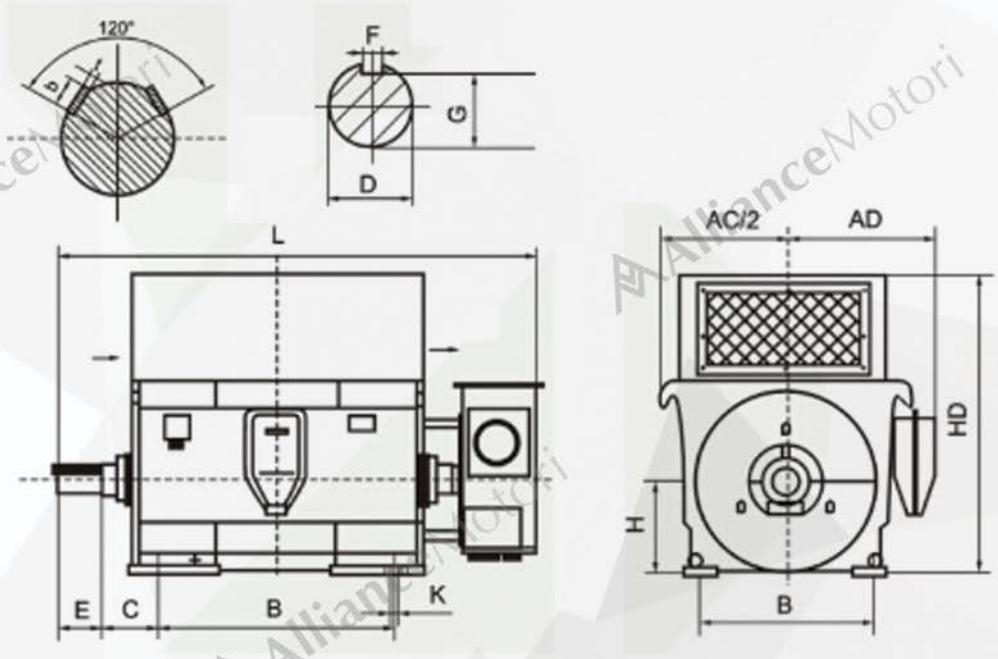

Feame	No. of poles	mounting dimensions											Outline dimensions			
		A	B	C	D	E	F	G	t	b	H	K	AC	AD	HD	L
450	4	800	1120	335	110	210	28	100			450	35	1300	1050	1475	2740
	6															
500	4	900	1250	475	120		32	109			500	42	1420	1110	1700	3020
	6–10				130	250		119								
560	4	1000	1400 1600 1)	500	150				11.4	39.7	560		1600	1200	1850	3450
	6–12				160	300			12.4	42.8						
630	4	1120	1600 1800 2)	530	170					44.2	630	48	1800	1300	2050	3800
	6–12				180					45.6						

1) 1400 is the data which commutator puts outside of the bearing, 1600 is the data which commutator puts inside of the bearing.
2) 1600 is the data which commutator puts outside of the bearing, 1800 is the data which commutator puts inside of the bearing
3) When uses the sliding bearing, C dimension deviation does not include axial flee movement.
Note: All dimensions are only for reference, when the ordering pis takes the final outline motor drawings which manufacturer provides.

ALLIANCE MOTORI Reserves the right to change the technical data and dimensions in order to update or improve its products, without prior notice

Slip Ring Motor - A-YRKK

YRKK Series Slip Ring High Voltage Three Phass Asynchronous Motor (H450-630mm)
10000V IP44/54 Technical Specification

Model	Output(Kw)	Sychronous Speed(r/min)	Rated Current(A)	Efficiency(%)	Power Factor (COS ¢)	RotorOpen-circuit Voltage (V)	Rotor Rated Current(A)	Max.Torque multiple	Weight(kg)
YRKK4501-4	250		19.0	91.5					
YRKK4502-4	280		21.2	91.8					
YRKK4503-4	315		23.8	92.1					
YRKK4504-4	355		26.8	92.3	0.83				
YRKK4505-4	400		30.0	92.6					
YRKK4506-4	450		33.7	92.8					
YRKK5001-4	500		36.9	93.2					
YRKK5002-4	560		41.1	93.6					
YRKK5003-4	630	1500	46.2	93.7	0.84			1.8	
YRKK5004-4	710		52.0	93.8					
YRKK5005-4	800		58.6	93.9					
YRKK5601-4	900		65.0	94.1					
YRKK5602-4	1000		72.1	94.2	0.85				
YRKK5603-4	1120		80.7	94.3					
YRKK6301-4	1250		88.9	94.4					
YRKK6302-4	1400		99.5	94.5	0.86				
YRKK6303-4	1600		113.5	94.6					
YRKK4504-6	250		20.0	91.4					
YRKK4505-6	280		22.3	91.6	0.79				
YRKK4506-6	315		25.1	91.8					
YRKK5001-6	355		27.8	92.0					
YRKK5002-6	400		31.3	92.2					
YRKK5003-6	500		39.0	92.6	0.80			1.8	
YRKK5004-6	560		43.6	92.8					
YRKK5601-6	630	1000	47.7	93.0					
YRKK5602-6	710		53.6	93.2					
YRKK5603-6	800		60.2	93.5	0.82				
YRKK5604-6	900		67.6	93.7					
YRKK5605-6	1000		73.2	93.9					
YRKK6301-6	1120		81.8	94.1	0.84				
YRKK6302-6	1250		91.1	94.3					
YRKK5002-8	250		21.3	91.4					
YRKK5003-8	280		23.9	91.5					
YRKK5004-8	315		26.8	91.7	0.74				
YRKK5005-8	355	750	30.1	91.9				1.8	
YRKK5006-8	400		33.9	92.1					
YRKK5601-8	450		37.5	92.3					
YRKK5602-8	500		41.6	92.5	0.75				

Slip Ring Motor - A-YRKK

YRKK Series Slip Ring High Voltage Three Phass Asynchronous Motor (H450-630mm)
10000V IP44/54 Technical Specification

Model	Output(Kw)	Sychronous Speed(r/min)	Rated Current(A)	Efficiency(%)	Power Factor (COS ¢)	RotorOpen-circuit Voltage (V)	Rotor Rated Current(A)	Max.Torque multiple	Weight(kg)
YRKK5603-8	560	750	40.9	93.0	0.78			1.8	
YRKK5604-8	630		45.9	93.2					
YRKK6301-8	710		51.6	93.4	0.80				
YRKK6302-8	800		58.1	93.6					
YRKK6303-8	900		64.4	93.8					
YRKK5005-10	250	600	22.4	90.9	0.71			1.8	
YRKK5006-10	280		25.0	91.2					
YRKK5601-10	315		27.2	91.6	0.73				
YRKK5602-10	355		30.6	91.7					
YRKK5603-10	400		34.4	91.9					
YRKK5604-10	450		38.6	92.3					
YRKK5605-10	500		42.7	92.5					
YRKK6301-10	560		46.5	92.6	0.75			1.8	
YRKK6302-10	630		52.2	92.9					
YRKK6303-10	710		58.6	93.2					
YRKK6304-10	800		66	93.3					
YRKK5602-12	250	500	22.4	90.8	0.71			1.8	
YRKK5603-12	280		25.0	91.0					
YRKK5604-12	315		28.1	91.1					
YRKK5605-12	355		31.7	91.2					
YRKK6301-12	400		34.6	91.5	0.73			1.8	
YRKK6302-12	450		38.8	91.8					
YRKK6303-12	500		43.0	92.0					
YRKK6304-12	560		47.9	92.4					

ALLIANCE MOTORI Reserves the right to change the technical data and dimensions in order to update or improve its products, without prior notice

HEAVY INDUSTRY ELECTRIC MOTOR

AllianceMotori

www.alliancemotori.com