FLUGO

Technical Catalogue



FAS Series

Single-Suction Split Casing Pump

FAS SERIES SINGLE-STAGE DOUBLE-SUCTION CENTRIFUGAL PUMPS

Outline of product

Model FAS pumps are single-stage double-suction split volute casing centrifugal pumps and used or liquid transportation for water works, air-conditioning circulation, building, irrigation, drainage pump station, electric power station, industrial water supply system, fire-fighting system, ship building and so on.

FAS Data of running

Outlet diameter of pump	DN	80 ~ 800mm
Capacity	Q	≤11600m3/h
Head	H	≤200m
Working temperature	T	<105°C
Solid grains		≤80mg/L
DN		

Characteristic of structure

1. Compact structure nice appearance, good stability and easy installation.
2. Stable running the optimally designed double-suction impeller makes the axial force reduced to the minimum and has a blade-style of very excellent hydraulic performance, both internal surface of the pump casing and the impeller surface, being precisely cast, are extremely smooth and have a notable performance vapor-corrosion resistance resisting and a high efficiency.
3. Bearing use SKF or NSK bearings to guarantee a stable running, low noise and long duration.
4. Shaft seal use BURGMANN mechanical or stuffing seal to ensure 8000h non-leak running.

FLUGO reserves the right to change the technical data and dimensions in order to update or improve its product without prior notice.

Model Meaning

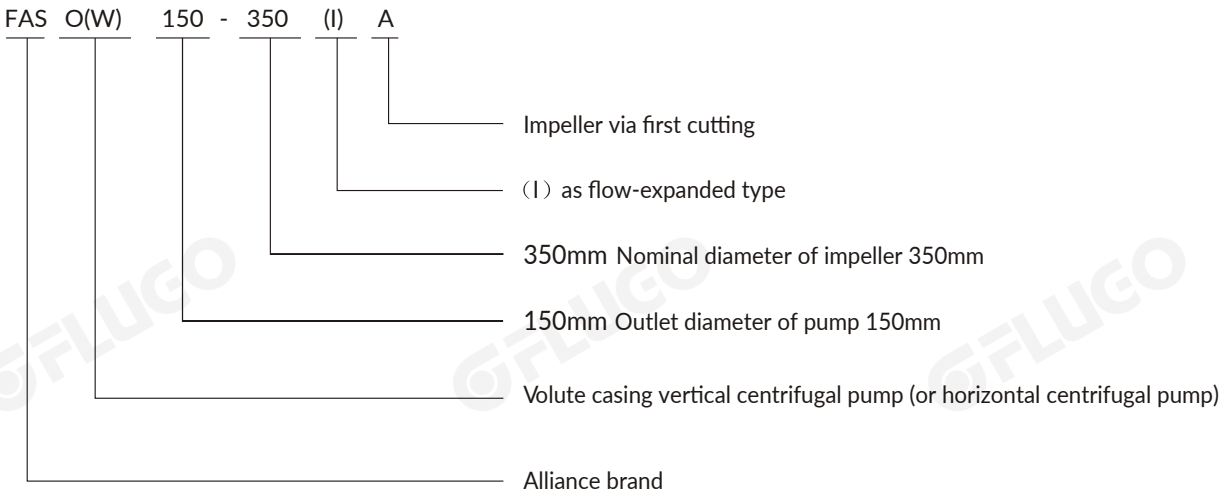

List of main parts materials

Part	Material	GB
Pump casing	Casting pig Ductalloy Cast steel Stainless steel	HT250 QT400-18 ZG230-450
Impeller	Bronze Casting pig Silicon brass Stainless steel	ZCuSn10Pb1 HT250 ZCuZn16Si4 According to confirmation of contract
Shaft	Stainless steel Carbon steel	2Cr13 40Cr
Seal-ring on pump casing	Bronze Casting pig Silicon brass Stainless steel	ZCuSn10Pb1 HT250 ZCuZn16Si4 According to confirmation of contract

Structural drawing of model FAS horizontal pump

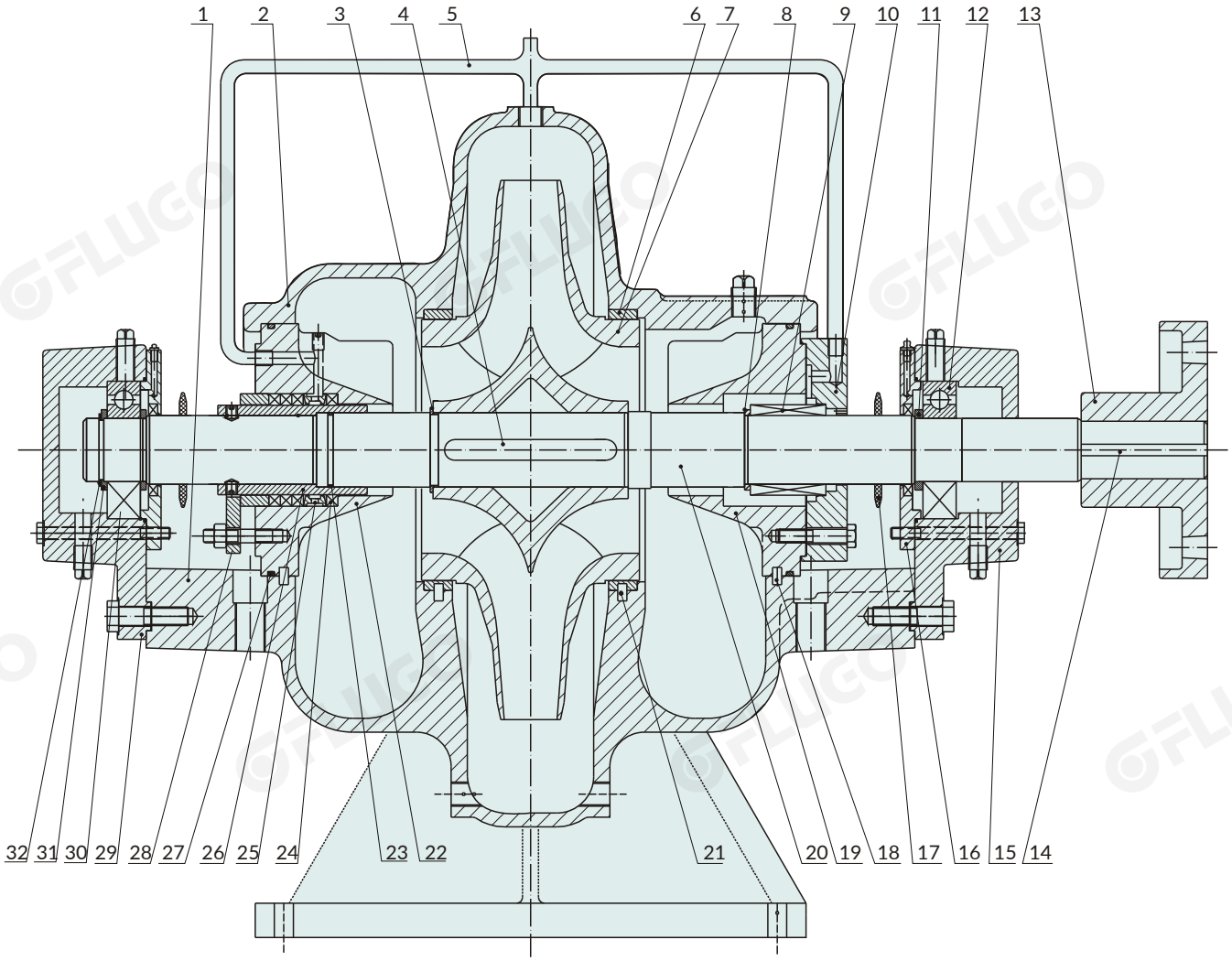

Structural drawing 1

1	pump casing	8	seal ring	15	bearing bady A	22	seal body (for stuffing seal)	29	bearing body B
2	pump cover	9	mechanical seal	16	seal gland	23	o-seal ring	30	bearing
3	use elastic baffle	10	mechanical seal gland	17	water baffle	24	stuffing	31	bearing baffle
4	key	11	use elastic baffle	18	column pin	25	stuffing ring	32	use elastic baffle
5	water-rinsing pipe part	12	bearing	19	seal body (mechanical seal)	26	stuff muff		
6	seal-ring	13	pump linkage	20	shaft	27	o-seal ring		
7	impeller	14	key	21	column	28	packing gland part		

FLUGO reserves the right to change the technical data and dimensions in order to update or improve its product without prior notice.

Structural drawing of model FAS horizontal pump

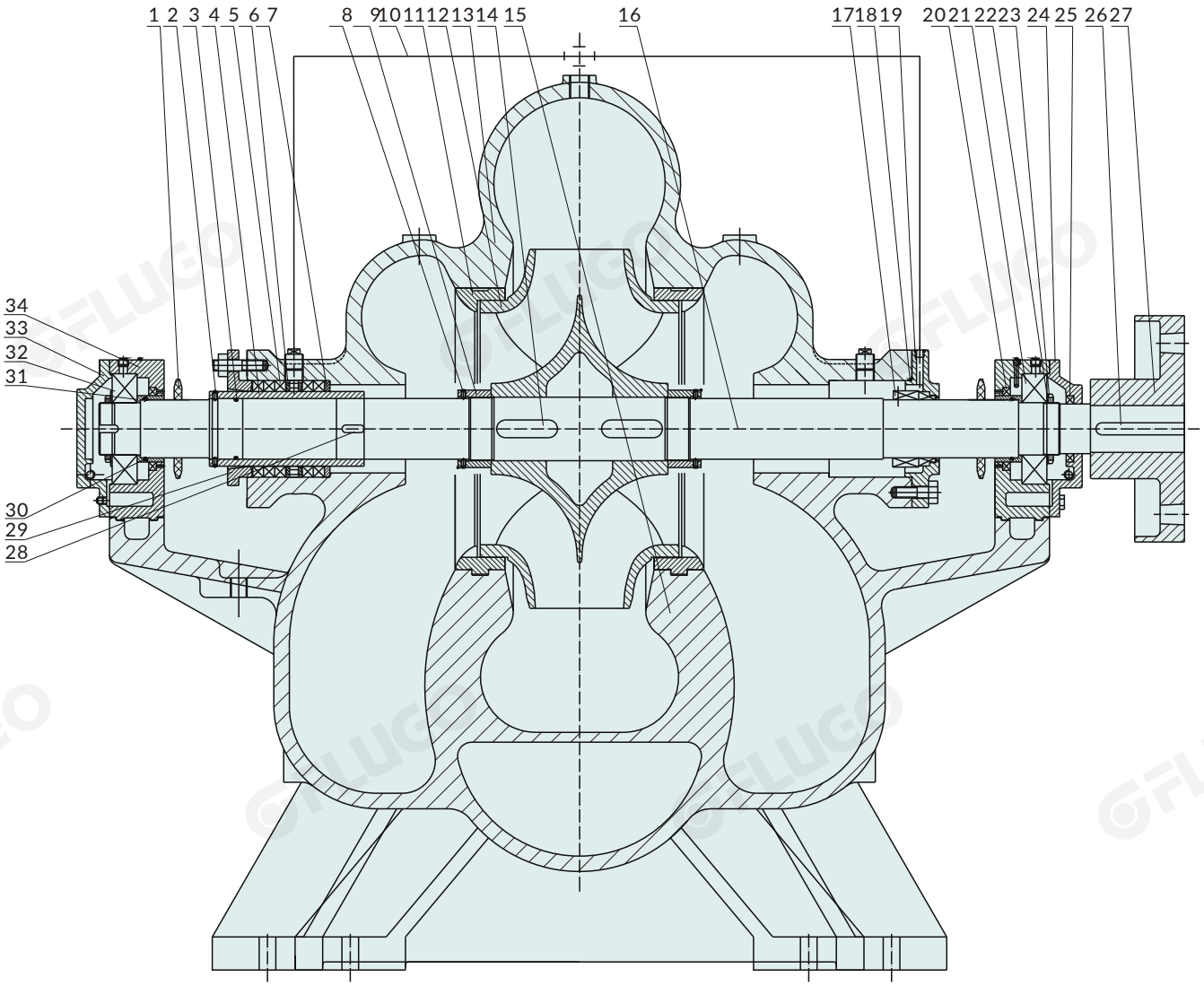

Structural drawing 2

1	water baffle	8	inner-hexangular concave end stress screw	15	pump casing	22	washer	29	stuffing gland
2	inner-hexangular concave end stress screw	9	impeller nut	16	shaft (mechanicl seal)	23	round nut	30	o-seal ring
3	o-seal ring	10	water-sealing pipe part	17	mechanical seal	24	bearing gland A	31	bearing baffle
4	stuff muff	11	seal-ring	18	o-seal ring	25	oil-seal o rame	32	bearing
5	stuffing	12	impeller	19	mechanical seal gland	26	key	33	seal gland B
6	stuffing ring	13	pump cover	20	oil seal of frame	27	pump bearing gland	34	bearing body
7	stuffing baffle	14	key	21	bearing	28	key		

Structural drawing of model FAS horizontal pump

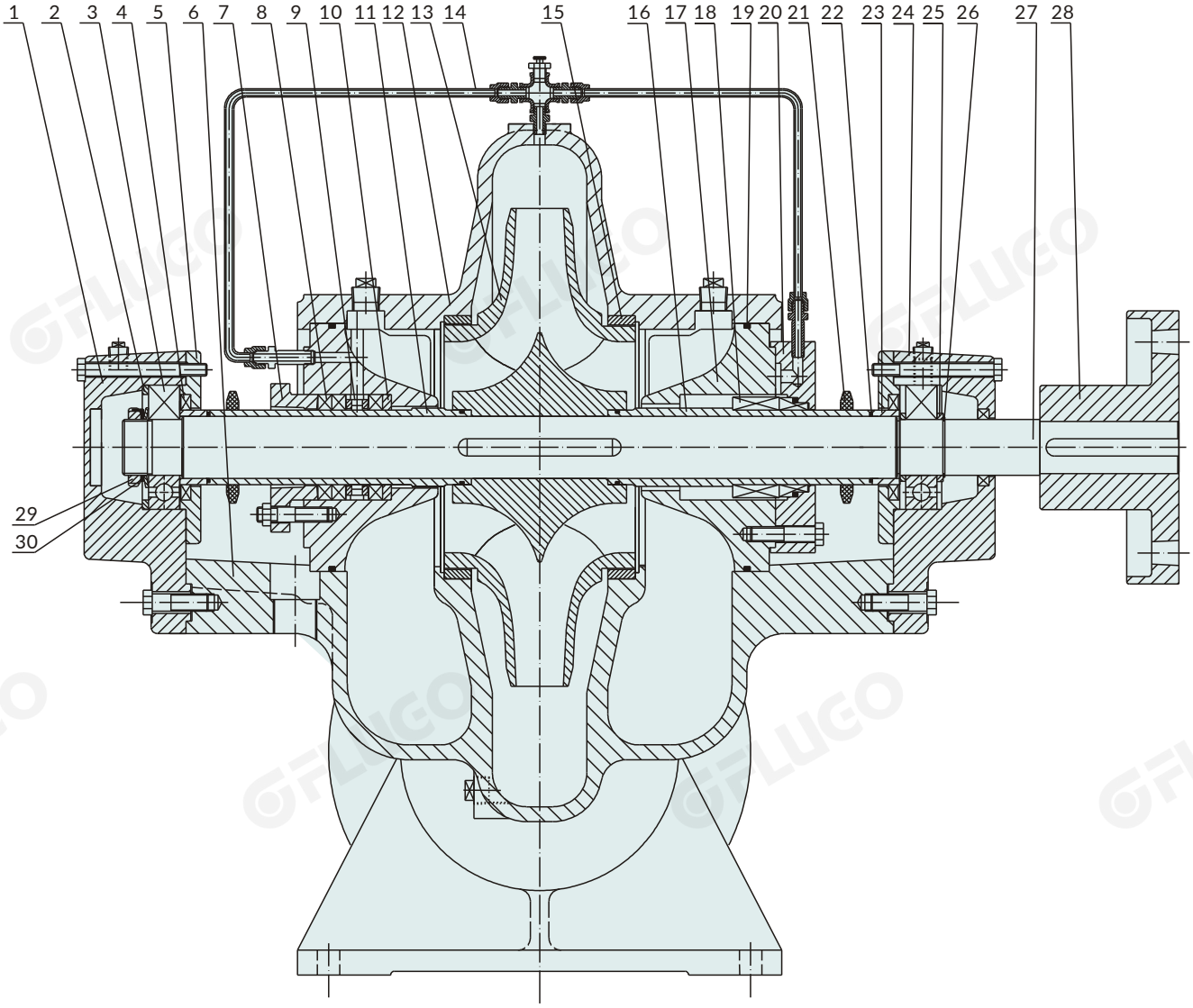

Structural drawing 3

1	bearing body B	7	stuffing gland	13	impeller	19	o-ring	25	bearing baffle
2	bearing washer	8	stuffing	14	water-rinsing pipe art	20	seal gland	26	elastic baffle
3	bearing	9	stuffing ring	15	seal-ring	21	water baffle	27	shaft
4	oil-seal o rame	10	stuffing baffle	16	mechanical seal muff	22	o-ring	28	pump bearing gland
5	bearing gland	11	stuff muff	17	seal-body	23	nuff	29	round nut
6	pump casing	12	pump cover	18	mechanical seal	24	bearing body A	30	hrust washer

FLUGO reserves the right to change the technical data and dimensions in order to update or improve its product without prior notice.

Structural drawing of model FAS horizontal pump

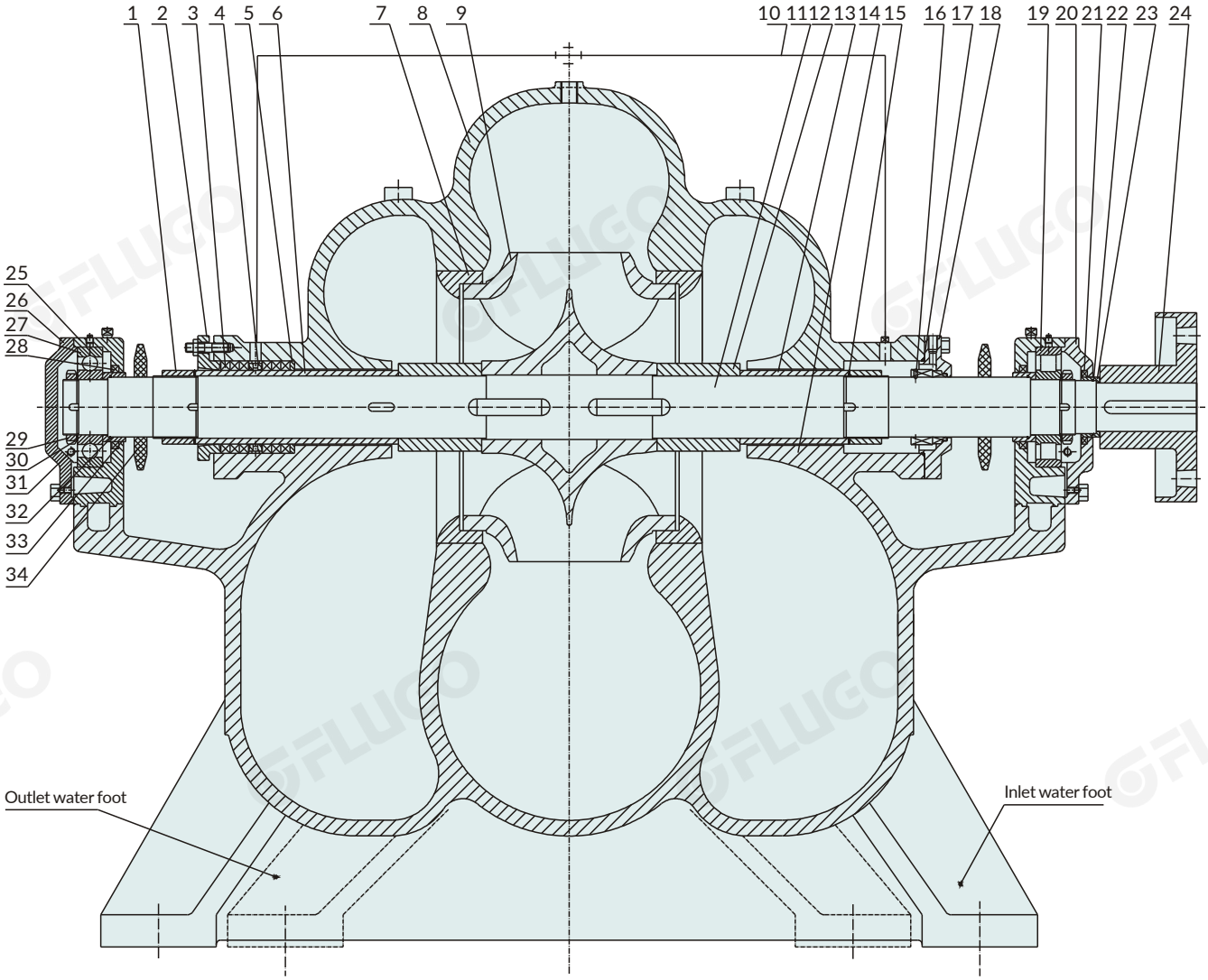

Structural drawing 4

1	muff nut	8	pump cover	15	hrust washer	22	O-ring	29	round nut
2	stuffing gland	9	Impeller	16	mechanical seal	23	seal baffle B	30	hrust washer
3	stuffing	10	water-sealing pipe part	17	O-ring	24	pump bearing gland	31	oil level meter
4	stuffing ring	11	shaft	18	seal gland	25	bearing body	32	O-ring
5	stuffing baffle	12	muff	19	roll bearing	26	bearing gland B	33	bearing baffle A
6	stuff muff	13	mechanical seal muff	20	bearing gland A	27	bearing	34	water baffle
7	seal-ring	14	pump casing	21	oil seal of frame	28	oil-seal o rame		

Structural drawing of model FAS Vertical pump

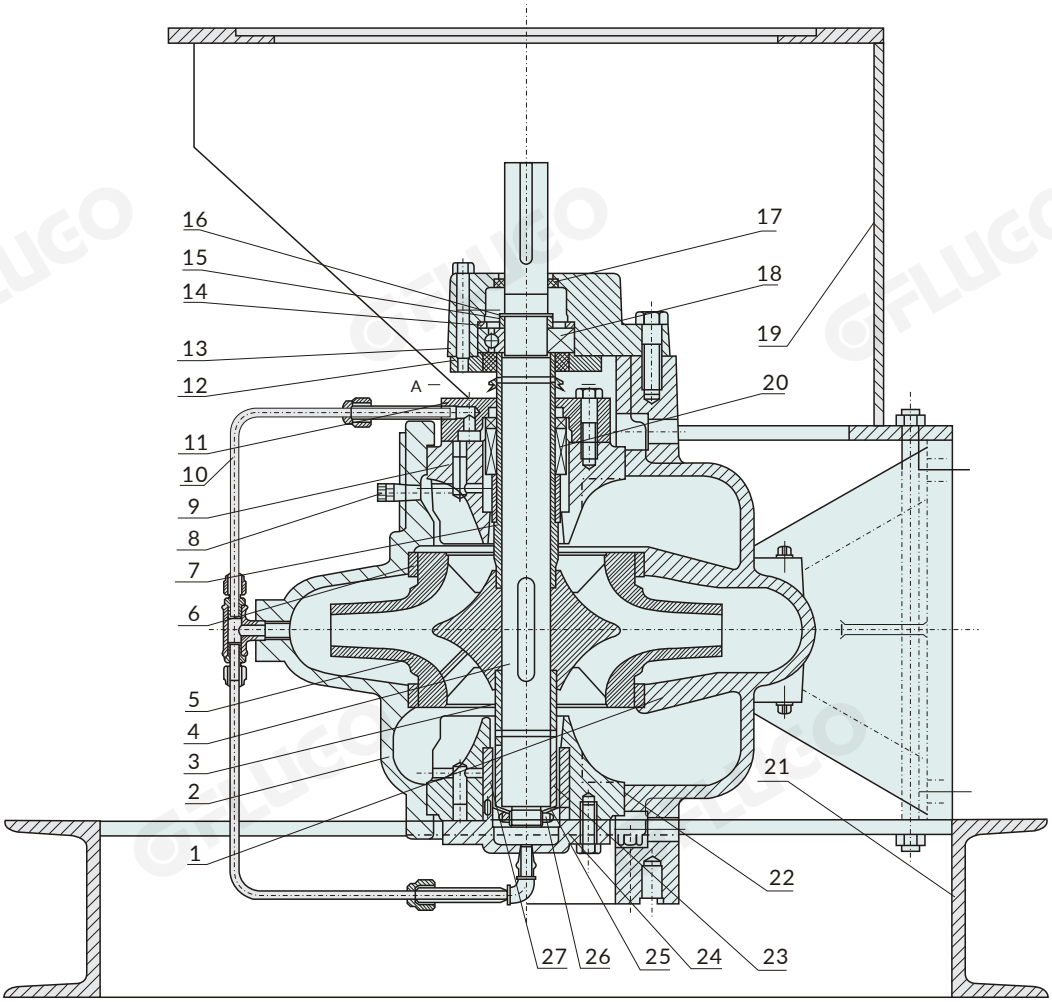

Structural drawing 5

1	pump casing	6	seal-ring	11	seal gland or stuffing gland	16	elastic baffle	21	foundation	26	locking nut
2	pump cover	7	Nuff	12	bearing gland	17	oil-seal of frame	22	O-seal ring	27	water-guide bearing
3	lower nuff A	8	deflating chamber	13	bearing body	18	bearing	23	lower muff B		
4	shaft	9	sealing body	14	bearing washer	19	motor stand	24	water-guide bea-ring gland		
5	impeller	10	water-rinsing pipe part	15	bearing baffle	20	mechanical seal or stuffing seal	25	butterfly-type spring		

FLUGO reserves the right to change the technical data and dimensions in order to update or improve its product without prior notice.

Structural drawing of model FAS Vertical pump

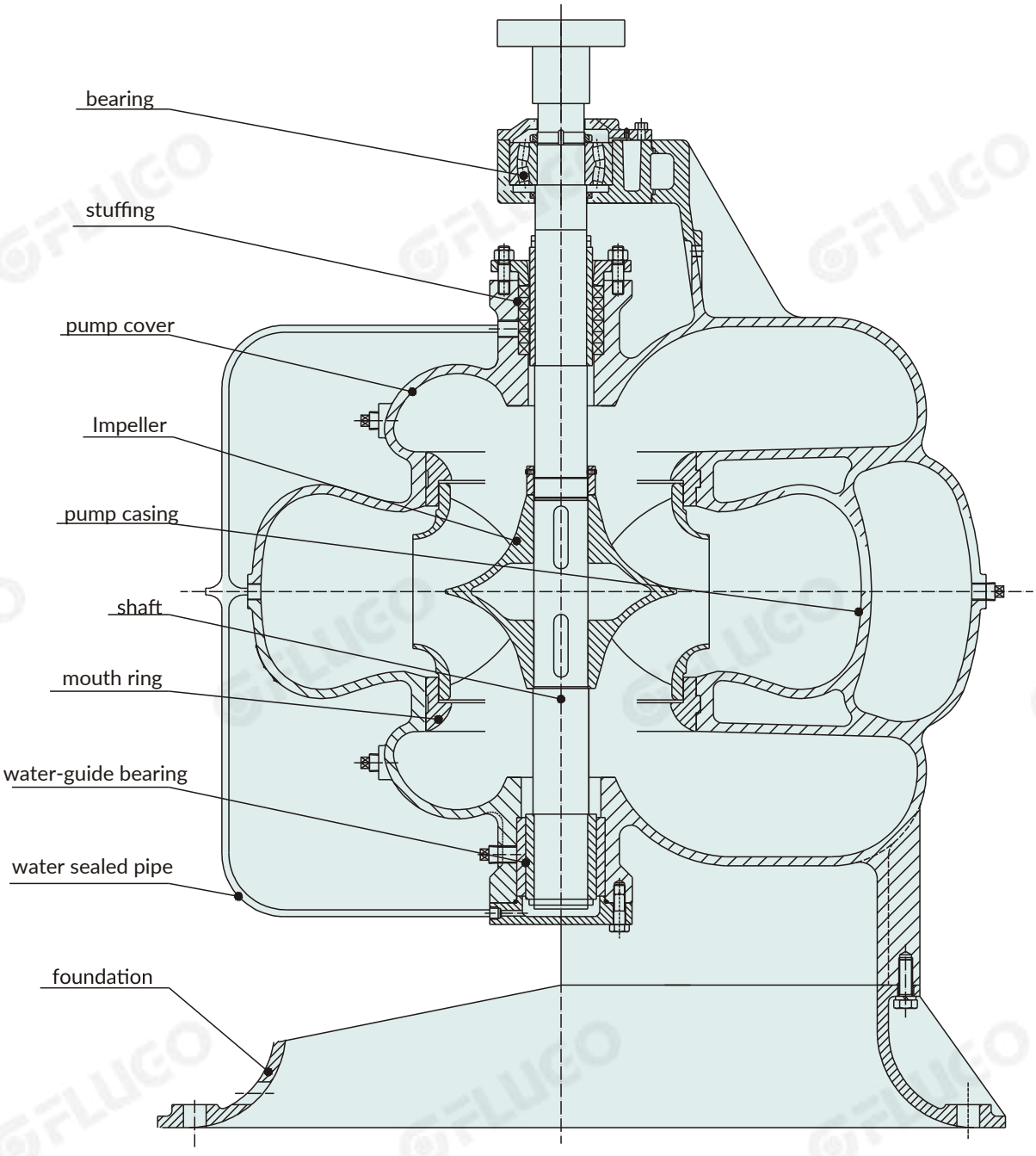

Structural drawing 6

Note: this structure is available with the outlet of 400 aperture upward, please contact with the technical center in case of a special requirement!

Structural drawing of model FAS-L Type horizontal pump

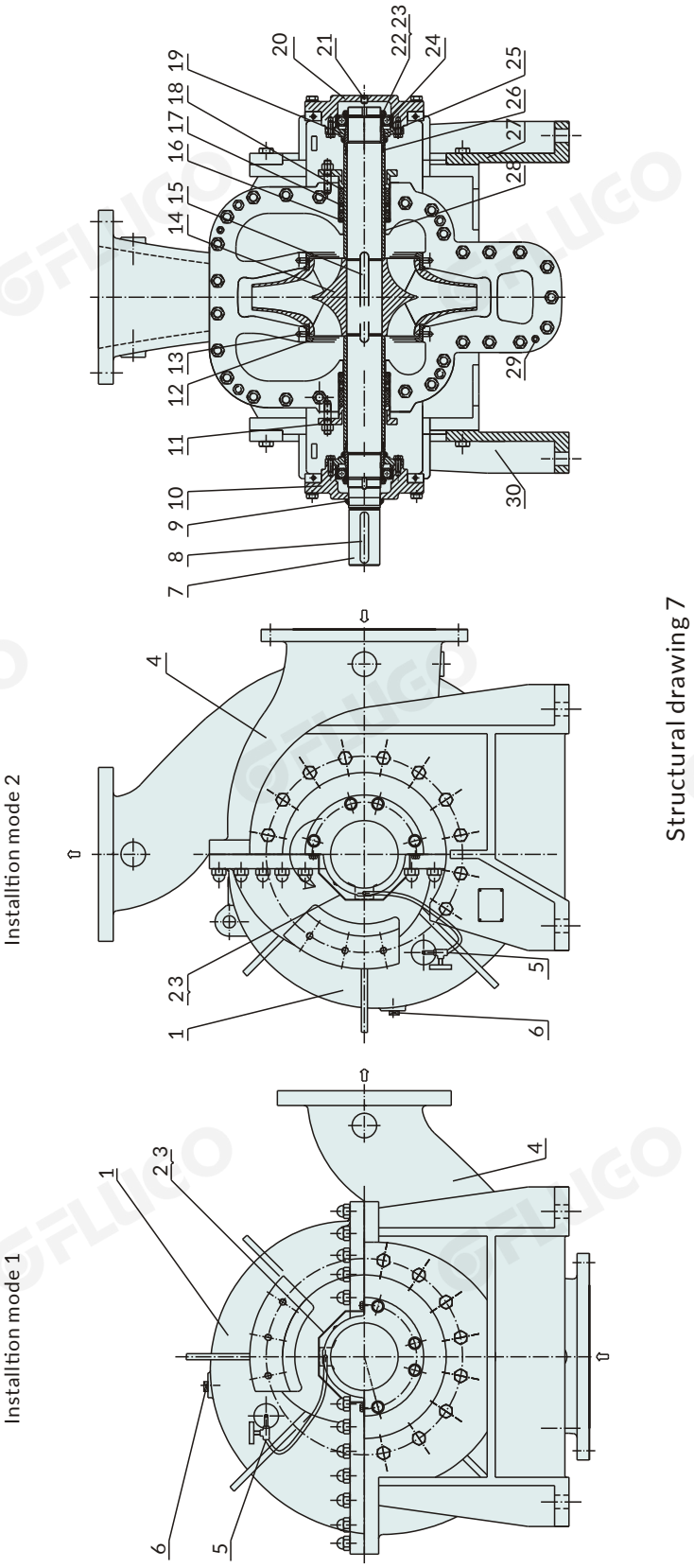

Note: this structure is available with the outlet of 400 aperture below, please contact with the technical center in case of a special requirement!

1	pump cover	7	shaft	13	column pin	19	bearing gland	25	short muff		
2	Protective cover A	8	key	14	Impeller	20	bearing body B	26	O-seal ring		
3	Protective cover B	9	oil seal	15	key	21	Iner-hexangular concave end stress screw	27	Support B		
4	pump casing	10	bearing body A	16	stuffing baffle	22	round nut	28	stuff muff		
5	connection pipe	11	stuffing gland	17	stuffing ring	23	Round nut used thrust washer	29	Threaded-end conical pin		
6	wire-jam	12	double-suction seal ring	18	stuffing	24	Deep-ditch ball bearing	30	Support A		

FLUGO reserves the right to change the technical data and dimensions in order to update or improve its product without prior notice.

FAS type pump atlas of style

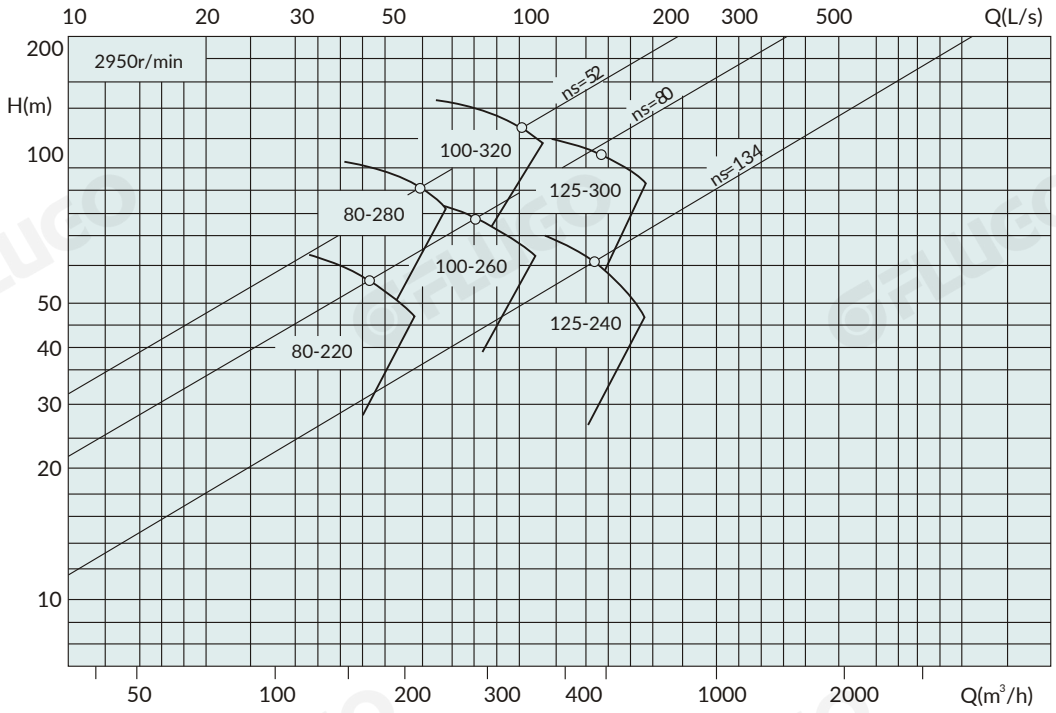

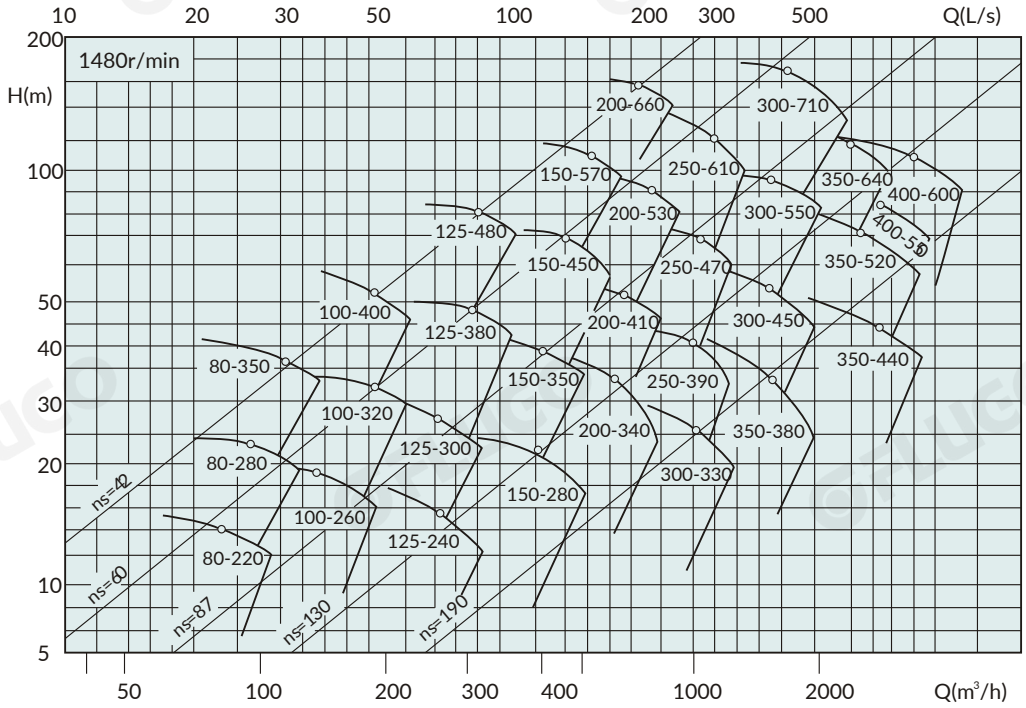

FAS type pump atlas of style

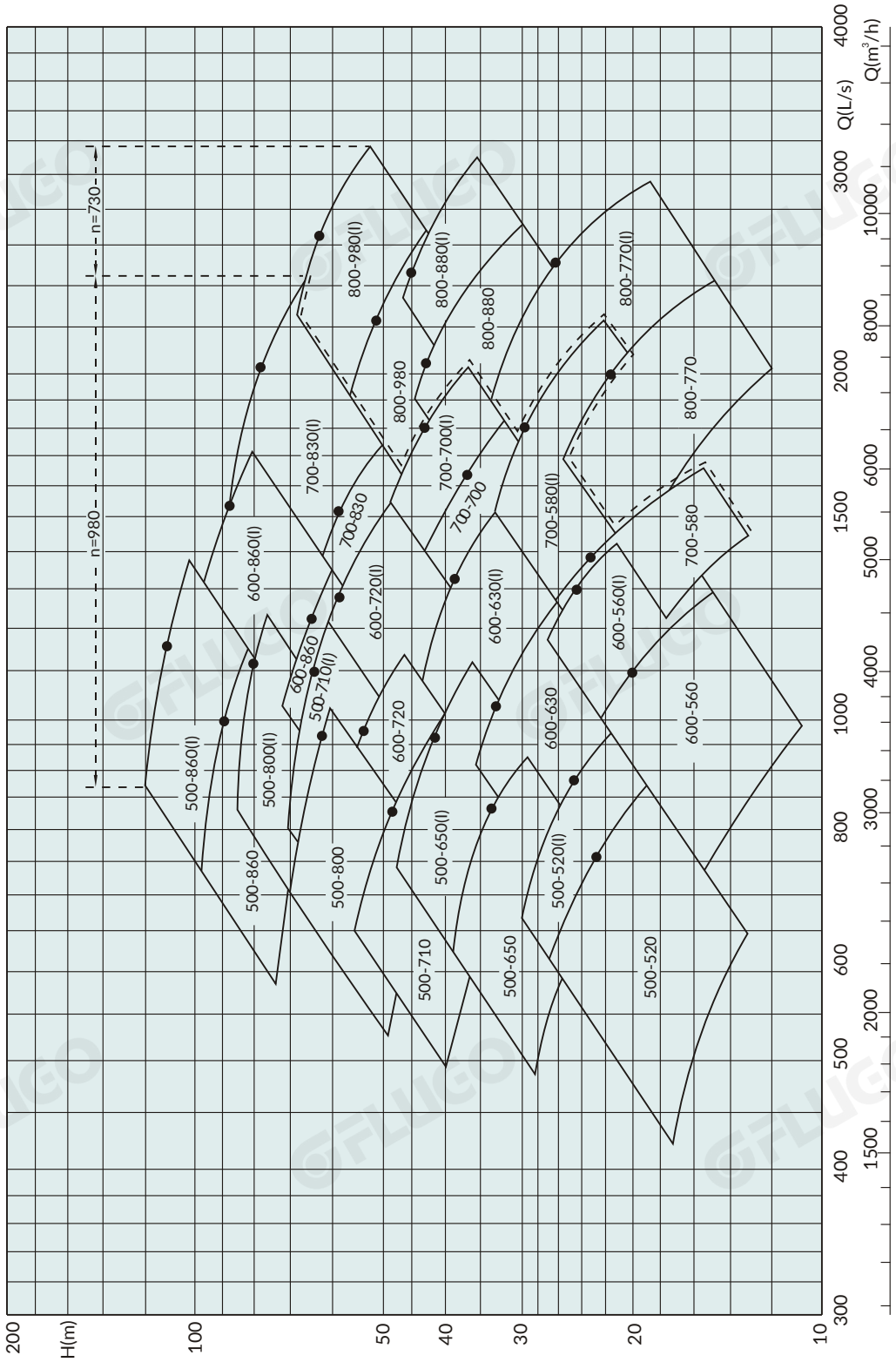

FLUGO reserves the right to change the technical data and dimensions in order to update or improve its product without prior notice.

FAS type pump performance

No.	Pump type		Capacity (m^3/h)	Capacity (L/s)	Head (m)	Speed (r/min)	Motor power (kw)	Eff. (%)	(NPSH)r (m)	Weight (kg)
1	80-220(I)		22.0 83.5 121.0	6.1 23.2 33.6	17.0 13.8 10.0	1480	5.5	82	1.6	181
2		A	20.0 77.2 108.0	5.6 21.4 30.0	14.8 11.8 8.7		4	81		
3		B	17.5 70.4 96.0	4.86 19.6 26.6	12.4 9.8 7.7		3	80.5		
4		C	16.0 64.4 83.0	4.4 17.9 23.0	10.6 8.2 6.8		3	78		
5			60.0 164.5 198.0	16.7 45.7 55.0	64.5 55.0 48	2950	45	82	4.5	181
6		A	59.0 152.9 180.0	16.3 42.5 50.0	58.0 47.5 41.0		37	81		
7		B	55.0 138.5 162.0	15.3 38.5 45.0	47.0 39.0 34.0		30	80.5		
8		C	52.0 128.4 144.0	14.4 35.7 400	42.0 33.5 30.0		22	77.8		
9	80-220		17.0 66.5 108.0	4.7 18.5 30.0	16.0 12.8 7.8	1480	4	81	1.7	181
10		A	16.0 71.0 98.0	4.4 17.0 27.2	13.9 10.8 7.0		3	80		
11		B	15.0 55.8 85.0	4.2 15.5 23.6	11.8 9.0 6.2		3	78		
12		C	14.5 57.0 72.0	4.0 14.3 20.0	10.0 7.6 6.1		2.2	74		
13			60.0 134.5 162.0	16.6 37.4 45.0	58.0 51.0 46.0	2950	37	81	3.5	181
14		A	58.0 124.2 144.0	16.1 34.5 40.0	49.0 43.5 39.0		30	80		
15		B	57.0 113 129.6	15.8 31.4 36.0	41.0 36.0 33.0		22	78.2		
16		C	55.0 105 126.0	15.2 29.2 35.0	35.0 31.0 28.0		18.5	74		
17	80-280(I)		26.0 104.5 138.0	7.2 29.0 38.3	24.5 22.5 18.0	1480	11	78.5	2.3	194
18		A	25.0 96 129.0	6.9 26.7 35.8	22.0 19.0 16.0		11	78		
19		B	22.0 88.1 116.0	6.1 24.5 32.2	19.5 16.0 13.0		7.5	76		
20		C	21.0 79.4 105.0	5.8 22.0 29.0	16.8 13.0 10.5		5.5	75		
21			80.0 198.0 234.0	22.0 55.0 65.0	106.0 90.0 77.5	2950	90	78.5	6.3	194
22		A	78.0 192.4 210.0	21.7 53.4 60.0	94.0 77.0 73.0		75	77.5		
23		B	75.0 174.7 198.0	20.8 48.5 55.0	77.5 63.5 59.0		55	76		

FAS type pump performance

No.	Pump type		Capacity (m^3/h)	Capacity (L/s)	Head (m)	Speed (r/min)	Motor power (kw)	Eff. (%)	(NPSH)r (m)	Weight (kg)
24	80-280(I)	C	74.0 155.0 180.0	20.5 43.0 50.0	60.0 50.0 45.0	2950	37	75	6.3	194
25	80-280		22.0 86.0 112.0	6.1 23.9 31.1	25.9 20.7 16.5	1480	7.5	77	1.9	194
26		A	21.0 80.4 102.0	5.8 22.3 28.3	21.8 18.1 14.3		7.5	76		
27		B	19.5 73.2 92.0	5.4 20.3 25.5	18.7 15.0 12.0		5.5	75		
28		C	18.0 66.8 82.0	5.0 18.6 22.8	15.8 12.5 10.5		4	74		
29			60.0 172.0 210.0	16.7 47.8 60.0	95.0 82.5 73.0	2950	75	77	6.8	194
30		A	58.0 160.0 198.0	16.1 44.4 55.0	82.0 71.5 63.0		55	76.2		
31		B	57.0 146.7 180.0	15.8 40.8 50.0	68.0 60.0 52.0		45	75.2		
32		C	56.0 132.6 162.0	15.5 36.8 45.0	56.0 49.0 41.0		30	74.4		
33	80-350(I)		29.0 114.4 131.0	8.1 31.8 36.5	41.0 38.8 37.0	1480	22	71.5	2.3	204
34		A	26.0 105.5 126.0	7.2 29.3 35.0	35.0 33.0 28.0		15	70.5		
35		B	22.0 96.3 108.0	6.1 26.8 30.0	29.0 27.5 26.0		15	70		
36		C	20.0 87.1 102.0	5.6 24.2 28.3	23.0 22.5 21.0		11	67.5		
37	80-350		26.0 100.0 132.0	7.2 27.8 36.7	37.0 35.5 27.9	1480	15	73	2.5	204
38		A	22.0 93.1 108.0	6.1 25.9 30.0	32.0 30.8 29.0		15	70		
39		B	20.0 82.8 95.4	5.6 23.0 26.5	26.0 25.5 24.0		11	66		
40		C	18.0 70.0 71.0	5.0 19.4 19.7	23.0 20.0 19.0		7.5	64		
41	100-260(I)		38.0 145.0 212.0	10.6 40.3 58.9	23.5 18.8 13.1	1480	11	82.5	2.4	260
42		A	37.0 132.9 192.0	10.3 36.9 53.0	20.1 15.8 11.5		11	81		
43		B	36.0 122.9 173.0	10.0 34.1 48.1	17.0 13.5 10.2		7.5	79		
44		C	34.0 115.9 154.0	9.4 32.2 42.8	14.5 11.0 8.9		5.5	77.5		
45			148.5 289.0 342.0	41.3 80.3 90.0	86.0 75.0 62.0	2950	90	82.5	7.1	260
46		A	120.8 264.9 306.0	33.6 73.6 85.0	74.0 63.0 52.9		75	80.5		

FLUGO reserves the right to change the technical data and dimensions in order to update or improve its product without prior notice.

FAS type pump performance

No.	Pump type		Capacity (m^3/h)	Capacity (L/s)	Head (m)	Speed (r/min)	Motor power (kw)	Eff. (%)	(NPSH)r (m)	Weight (kg)
47	100-260(I)	B	70.0 240.6 288.0	19.4 66.8 80.0	65.0 52.0 43.5	2950	55	79	7.1	260
48		C	60.0 223.4 252.0	16.7 62.0 70.0	56.0 44.8 37.0		45	78		
49	100-260		30.0 123.5 170.0	8.3 34.3 47.2	21.7 17.0 12.5	1480	11	81.5	1.9	260
50		A	28.0 114.0 154.0	7.8 31.7 42.8	19.0 14.5 11.3		7.5	79.5		
51		B	26.0 105.9 143.0	7.2 29.4 39.7	16.3 12.5 9.2		7.5	78		
52		C	25.0 99.3 131.0	6.9 27.6 36.4	13.3 11.0 7.9		5.5	76		
53			52.0 245.5 288.0	14.4 68.2 80.0	81.0 68.0 60.0	2950	75	81.5	7.4	260
54		A	51.5 227.7 270.0	14.3 63.3 75.0	69.0 58.5 50.0		55	79.5		
55		B	50.5 212.6 252.0	14.0 59.0 70.0	60.0 51.0 42.0		45	77.5		
56		C	49.0 195.2 234.0	13.6 54.2 65.0	51.0 43.0 35.0		37	76		
57	100-300		100 160 200	28 44 56	128 121 110	2950	90	72	10	280
58		A	90 150 190	25 42 53	116 109 96		75	70.5		
59		B	85 140 180	24 39 50	102 96 5		75	69		
60		C	80 130 170	22 36 47	89 84 73		55	67.5		
61	100-320(I)		47.0 185.5 225.0	13.1 51.5 62.5	38.1 31.2 26.0	1480	22	80	2.6	300
62		A	42.0 172.6 204.0	11.7 47.9 56.7	33.2 27.0 22.5		18.5	79.6		
63		B	38.0 157.5 184.0	10.6 43.8 51.1	27.9 22.5 18.5		15	79.3		
64		C	37.0 142.8 165.0	10.3 39.7 45.8	23.2 18.5 16.0		11	79		
65			185.0 368.0 432.0	51.4 102.2 120.0	152.0 123.0 102.0	2950	200	80	11	300
66		A	140.0 341.6 396.0	38.9 94.9 110.0	135.0 106.0 89.5		160	79.6		
67		B	100.0 314.8 360.0	27.7 87.4 100.0	117.0 90.0 80.0		132	79.3		
68		C	119.0 245.4 288.0	33.1 68.2 80.0	88.0 74.0 64.0		90	79		
69	100-320		50.0 141.5 174.0	13.9 39.3 48.3	36.0 29.5 25.5	1480	18.5	78	2.2	300

FAS type pump performance

No.	Pump type		Capacity (m^3/h)	Capacity (L/s)	Head (m)	Speed (r/min)	Motor power (kw)	Eff. (%)	(NPSH)r (m)	Weight (kg)
70	100-320	A	48.0 131.6 164.0	13.3 36.6 45.6	31.0 25.5 21.6	1480	15	77.6	2.2	300
71		B	47.0 120.0 152.0	13.1 33.3 42.2	26.0 21.2 17.9		11	77.3		
72		C	44.0 112.4 143.0	12.2 31.2 39.7	21.5 17.0 14.1		11	77		
73	100-320		70.0 283.0 324.0	19.4 78.6 90.0	141.0 119.0 108.0	2950	160	78	9.5	300
74		A	65.0 263.3 306.0	18.1 73.1 85.0	121.0 103.0 90.0		132	77.6		
75		B	61.3 237.8 270.0	17.0 66.0 75.0	98.0 84.0 74.0		90	77.3		
76		C	60.9 215.5 252.0	16.9 60.0 70.0	80.0 69.0 58.0		75	77		
77	100-400(I)		70.0 185.5 216.0	19.4 51.5 60.0	57.0 52.0 45.0	1480	45	73	2.5	241
78		A	65.0 170.6 198.0	18.1 47.4 55.0	49.0 44.0 38.0		37	72		
79		B	62.0 158.6 180.0	17.2 44.0 50.0	43.0 38.0 33.0		30	71		
80		C	58.0 141.6 162.0	16.1 39.3 45.0	33.0 30.3 26.0		22	69		
81	100-400		60.0 163.0 187.2	16.7 45.3 52.0	56.0 52.0 45.0	1480	45	72	3.1	241
82		A	58.0 149.9 180.0	16.1 41.6 50.0	47.0 44.0 38.0		37	69		
83		B	54.0 138.4 162.0	15.0 38.5 45.0	40.0 37.5 33.0		30	66.5		
84		C	51.0 121.1 144.0	14.2 33.6 40.0	31.0 28.7 25.8		18.5	63		
85	125-240(I)		100.0 274.6 370.0	27.8 76.3 102.8	20.2 14.8 9.1	1480	18.5	85.5	2.2	400
86		A	92.0 259.3 332.0	25.6 72.0 92.2	18.3 13.2 8.3		15	84.5		
87		B	82.0 232.4 285.0	22.8 64.5 79.2	15.9 10.6 7.6		15	82.5		
88		C	78.0 210.5 240.0	21.7 58.5 66.7	13.2 8.7 6.8		11	77.5		
89			139.5 533.5 612.0	38.7 148.2 170.0	83.5 60.0 50.0	2950	132	85.5	8	400
90		A	124.0 496.7 576.0	34.4 138.0 160.0	72.0 52.0 36.0		110	84		
91		B	119.0 454.3 522.0	33.1 126.2 145.0	60.0 43.5 32.0		75	82		
92		C	103.0 411.6 460.0	28.6 114.3 127.8	48.0 34.0 30.0		75	77		

FLUGO reserves the right to change the technical data and dimensions in order to update or improve its product without prior notice.

FAS type pump performance

No.	Pump type		Capacity (m^3/h)	Capacity (L/s)	Head (m)	Speed (r/min)	Motor power (kw)	Eff. (%)	(NPSH)r (m)	Weight (kg)
93	125-240		100.0 256.5 320.1	27.8 71.2 88.9	20.2 15.1 10.8	1480	15	84.5	2.2	400
94		A	94.0 242.5 300.4	26.1 67.4 83.4	17.6 13.5 9.1		15	84		
95		B	90.0 223.8 265.0	25.0 62.2 73.6	15.0 11.5 8.4		11	82		
96		C	82.0 199.1 220.0	22.8 55.3 61.1	12.4 9.1 7.8		7.5	78		
97	125-240		111.0 472.5 540.0	30.8 131.2 150.0	78.0 60.5 50.0	2950	110	84.5	8.7	400
98		A	106.0 442.2 504.0	29.4 122.8 140.0	68.0 53.0 45.0		90	84		
99		B	102.0 393.7 450.0	28.3 109.4 125.0	54.0 42.0 36.0		75	82		
100		C	90.0 369.5 432.0	25.0 102.6 120.0	47.0 37.0 30.0		75	77		
101	125-300(I)		100.0 270.0 375.0	27.8 75.0 104.2	32.5 27.0 21.0	1480	30	84	2.1	350
102		A	80.3 243.7 348.0	22.3 67.7 96.7	27.5 22.0 15.5		22	82		
103		B	75.0 220.5 310.0	20.8 61.2 86.1	23.5 18.0 12.5		18.5	80		
104		C	60.5 195.8 270.0	16.8 54.4 75.0	19.0 14.2 10.5		15	78		
105			380.0 535.5 612.0	105.6 148.8 170.0	119.0 108.0 95.0	2950	220	84	8.2	350
106		A	285.0 483.4 558.0	79.2 134.3 155.0	98.0 88.0 80.0		185	82		
107		B	190.0 437.2 504.0	52.8 121.5 140.0	82.0 72.0 65.0		132	80		
108		C	90.2 389.0 450.0	25.1 108.1 125.0	66.0 57.0 50.0		110	78		
109	125-300		100.0 242.5 370.0	27.8 67.4 102.8	32.0 25.0 17.1	1480	30	83	1.9	350
110		A	90.3 222.3 290.0	25.1 61.8 80.6	26.3 21.0 15.0		18.5	82		
111		B	80.0 202.9 250.0	22.2 56.4 69.4	22.1 17.5 13.2		15	79		
112		C	70.1 179.5 210.0	19.5 49.9 58.3	17.3 13.7 11.9		11	76		
113			230.0 479.0 558.0	63.9 133.1 155.0	113.0 100.0 92.0	2950	200	83	7.9	350
114		A	182.0 437.7 504.0	50.5 121.6 140.0	93.0 83.5 75.0		160	82		
115		B	128.0 400.8 468.0	35.6 111.3 130.0	80.0 70.0 63.0		110	79		
116		C	85.0 355.2 414.0	23.6 98.7 115.0	63.0 55.0 48.0		90	76		

FAS type pump performance

No.	Pump type		Capacity (m^3/h)	Capacity (L/s)	Head (m)	Speed (r/min)	Motor power (kw)	Eff. (%)	(NPSH)r (m)	Weight (kg)
117	125-380(I)		125.0 310.5 360.0	34.7 86.3 100.0	52.0 47.0 42.0	1480	75	80	2.1	400
118		A	104.0 282.8 324.0	28.9 78.6 90.0	43.0 39.0 31.8		45	79		
119		B	93.0 254.2 288.0	25.8 70.6 80.0	34.0 31.5 27.0		37	78		
120		C	85.5 221.9 252.0	23.7 61.6 70.0	26.0 24.0 22.0		30	76		
121	125-380		100.2 278.0 324.0	27.8 77.2 90.0	47.0 43.0 38.0	1480	55	79	2.4	400
122		A	92.1 257.9 288.0	25.8 71.6 80.0	40.0 37.0 35.0		45	78		
123		B	84.0 234.1 270.0	23.3 65.0 75.0	33.0 30.5 27.0		30	77		
124		C	79.1 209.8 241.2	22.0 58.3 67.0	27.0 24.5 20.0		22	76		
125	125-400		160.0 260.0 310.0	44.0 72.0 86.0	178.0 166.0 153.0	2950	200	69	8.5	460
126		A	140.0 235.0 280.0	39.0 65.0 78.0	148.0 139.0 133.0		160	68		
127		B	130.0 225.0 250.0	36.0 63.0 69.0	131.0 120.0 113.0		132	67		
128	125-450		280 440 500	77.8 122.2 138.9	233.5 225 220	2950	450	68	7	500
129		A	265 410 470	73.6 113.9 130.6	218 210 206		400	67		
130		B	240 380 435	66.7 105.6 120.8	202.5 195 190		355	66		
131	125-480(1)		109.2 328.5 380.4	30.3 91.3 105.7	80.0 76.0 71.0	1480	110	80	2.3	500
132		A	100.0 307.3 350.9	27.8 85.4 97.4	70.0 66.5 62.0		90	78.5		
133		B	80.4 282.0 300.4	22.3 78.3 83.4	59.0 56.0 53.0		75	77		
134		C	60.0 250.4 270.4	16.6 69.6 75.1	47.0 44.2 40.8		45	76		
135	125-480		100.0 294.5 342.0	27.8 81.8 95.0	72.0 69.5 64.0	1480	90	79	2.7	500
136		A	90.1 274.8 320.2	25.0 76.3 88.9	63.0 60.5 55.1		75	78		
137		B	85.3 257.2 284.5	23.7 71.4 79.0	55.0 53.0 48.0		75	77		
138		C	78.5 230.0 238.8	21.8 63.9 66.3	45.0 43.5 41.3		45	76		

FLUGO reserves the right to change the technical data and dimensions in order to update or improve its product without prior notice.

FAS type pump performance

No.	Pump type		Capacity (m^3/h)	Capacity (L/s)	Head (m)	Speed (r/min)	Motor power (kw)	Eff. (%)	(NPSH)r (m)	Weight (kg)
139	125-570		250 400 470	69.4 111.1 130.6	110.5 107 104	1480	220	70	4	700
140		A	230 370 435	63.9 102.8 120.8	95 92 89		200	69		
141		B	210 340 400	58.3 94.4 111.1	82 80 77		185	68		
142	150-280(1)		160.0 443.5 504.0	44.4 123.2 140.0	27.5 21.0 17.0	1480	37	87	2.4	450
143		A	150.5 410.6 468.0	41.8 114.0 130.0	24.0 18.0 15.0		30	86		
144		B	130.0 367.0 432.0	36.1 101.9 120.0	20.0 15.0 11.7		22	84		
145		C	123.0 338.2 395.0	34.1 93.9 109.7	16.0 11.5 10.0		18.5	77		
146	150-280		140.0 397.0 450.0	38.9 110.3 125.0	26.0 20.4 18.0	1480	37	86	2.5	450
147		A	135.0 362.4 414.0	37.5 100.7 115.0	22.0 17.0 15.0		30	85		
148		B	128.0 340.7 396.0	35.6 94.6 110.0	18.0 14.5 12.0		22	84		
149		C	120.0 318.1 360.0	33.3 88.4 100.0	15.0 11.5 9.3		18.5	80		
150	150-310		210 350 406	58.3 97.2 112.8	33 29.5 27	1480	45	80	3	400
151		A	190 310 350	52.8 86.1 97.2	27.5 25 23		37	79		
152		B	165 270 310	45.8 75.0 86.1	22 20 18.5		30	78		
153	150-350(1)		180.0 447.5 522.0	50.0 124.3 145.0	43.0 35.0 31.2	1480	75	85	2.9	410
154		A	175.0 404.2 468.0	48.6 112.3 130.0	37.0 31.0 27.0		55	83		
155		B	162.0 363.0 414.0	45.0 100.8 115.0	30.0 25.0 21.0		37	81		
156		C	150.0 324.7 378.0	41.7 90.2 105.0	24.0 20.0 17.0		30	78		
157	150-450(I)		200.0 515.5 594.0	55.6 143.2 165.0	76.1 66.0 48.0	1480	132	82	3.0	630
158		A	190.0 468.4 540.0	52.8 130.1 150.0	64.0 54.5 48.0		110	81		
159		B	180.0 418.5 486.0	50.0 116.3 135.0	50.0 43.5 38.0		75	80		
160		C	175.0 375.4 432.0	48.6 104.3 120.0	41.0 35.0 32.0		55	78.5		

FAS type pump performance

No.	Pump type		Capacity (m^3/h)	Capacity (L/s)	Head (m)	Speed (r/min)	Motor power (kw)	Eff. (%)	(NPSH)r (m)	Weight (kg)
161	150-450		150.0 440.0 582.0	41.7 122.2 161.7	67.0 60.0 47.0	1480	110	81	3.4	630
162		A	140.0 401.7 468.0	38.9 111.6 130.0	56.0 50.0 46.0		90	80.5		
163		B	129.0 359.3 414.0	35.8 99.8 115.0	45.5 40.0 38.0		75	80		
164		C	115.0 326.3 378.0	31.9 90.6 105.0	37.0 33.0 30.5		45	78		
165	150-570(I)		200.0 584.0 684.0	55.6 162.2 190.0	119.0 105.0 95.0	1480	250	80	3.7	1100
166		A	180.0 536.2 612.0	50.0 148.9 170.0	101.0 88.5 83.0		200	79		
167		B	169.0 493.6 576.0	46.9 137.1 160.1	86.0 75.0 70.0		160	78		
168		C	150.0 450.0 522.0	41.7 125.0 145.0	70.0 61.5 55.9		132	77		
169	150-570		200.0 537.0 620.0	55.6 149.2 172.2	103.0 90.0 81.9	1480	200	79	4.2	1100
170		A	96.3 499.9 580.0	26.7 138.9 161.1	89.0 78.0 70.0		160	78		
171		B	82.8 468.5 540.0	23.0 130.1 150.0	78.0 68.5 61.0		132	77		
172		C	70.0 419.2 486.0	19.4 116.4 135.0	65.0 57.5 53.0		110	76		
173	200-340(I)		250.0 695.5 810.0	69.4 193.2 225.0	38.0 30.0 25.0	1480	90	87.5	4.2	590
174		A	240.0 641.2 738.0	66.7 178.1 205.0	32.0 25.5 22.0		75	86.5		
175		B	230.0 586.0 684.0	63.9 162.8 190.0	26.0 21.3 17.0		55	85		
176		C	220.0 530.0 610.0	61.1 147.2 169.4	22.0 17.0 14.0		37	79		
177	200-340		250.0 638.0 738.0	69.4 177.2 205.0	34.0 28.0 24.0	1480	75	86.5	4.1	590
178		A	240.0 596.8 738.0	66.7 165.8 205.0	29.0 24.5 18.0		55	86		
179		B	235.0 552.5 648.0	65.2 153.5 180.0	25.0 21.0 17.0		45	84		
180		C	225.0 497.1 576.0	62.5 138.1 160.0	26.0 17.0 14.0		37	82		
181	200-410(I)		265.0 702.0 810.0	73.6 195.0 225.0	62.8 48.0 42.0	1480	132	86.5	4.2	620
182		A	249.0 648.0 756.0	69.1 180.0 210.0	54.0 42.0 36.0		110	84.5		
183		B	238.0 612.0 702.0	66.1 170.0 195.0	46.0 35.5 30.0		90	83		

FLUGO reserves the right to change the technical data and dimensions in order to update or improve its product without prior notice.

FAS type pump performance

No.	Pump type		Capacity (m^3/h)	Capacity (L/s)	Head (m)	Speed (r/min)	Motor power (kw)	Eff. (%)	(NPSH)r (m)	Weight (kg)
184	200-410(I)	C	220.0 525.6 612.0	61.1 146.0 170.0	36.0 28.5 25.0	1480	75	81	4.2	620
185	200-410		250.0 649.0 756.0	69.4 180.3 210.0	60.0 48.0 43.0	1480	132	85.5	3.8	620
186		A	236.0 596.1 684.0	65.6 165.6 190.0	51.0 40.5 37.0		90	84		
187		B	215.0 550.2 630.0	59.7 152.8 175.0	44.2 34.5 31.0		75	82		
188		C	209.0 495.7 576.0	58.1 137.7 160.0	34.0 28.0 23.0		55	78		
189	200-530(I)		475.0 818.0 936.0	131.9 227.2 260.0	99.0 91.0 85.0	1480	315	83	4.1	970
190		A	460.0 750.0 864.0	127.8 208.3 240.0	82.0 76.5 71.0		250	82		
191		B	440.0 687.9 792.0	122.2 191.1 220.0	67.0 62.5 58.0		200	80		
192		C	420.0 630.0 720.0	116.7 175.0 200.0	51.5 47.5 44.0		132	78.5		
193	200-530		260.0 735.0 846.0	72.2 204.2 235.0	87.5 81.7 75.0	1480	250	82	3.9	970
194		A	250.0 670.5 774.0	69.4 186.3 215.0	73.5 68.0 63.0		200	81		
195		B	240.0 633.0 720.0	66.7 175.8 200.0	60.0 55.0 51.0		160	80		
196		C	230.0 576.3 666.0	63.9 160.1 185.0	47.5 43.5 40.0		110	78		
197	200-660(I)		280.0 756.0 935.0	77.8 210.0 259.7	164.0 148.0 135.0	1480	500	80	3.1	1120
198		A	270.0 729.7 846.0	75.0 202.7 235.0	142.0 127.0 120.0		450	78.5		
199		B	260.0 669.8 774.0	72.2 186.0 215.0	120.0 107.0 103.0		315	77		
200		C	250.0 637.4 738.0	69.4 177.0 205.0	99.0 88.0 83.0		250	76		
201	200-660		250.0 721.0 828.0	69.4 200.2 230.0	147.0 132.5 127.0	1480	400	79	2.9	1120
202		A	240.0 670.2 774.0	66.7 186.2 215.0	127.0 114.5 110.0		355	78.5		
203		B	230.0 621.6 720.0	63.9 172.7 200.0	110.0 98.5 93.0		250	78		
204		C	215.0 570.6 666.0	59.7 158.5 185.0	92.0 83.0 75.0		200	77		
205	200-740		550 700 850	153 194 236	205 200 192	1480	710	69	5.3	1700
206		A	520 685 820	144 190 228	187 180 172		630	67		

FAS type pump performance

No.	Pump type		Capacity (m^3/h)	Capacity (L/s)	Head (m)	Speed (r/min)	Motor power (kw)	Eff. (%)	(NPSH)r (m)	Weight (kg)
207	200-740	B	500 665 800	139 185 222	170 163 155	1480	630	65	5.3	1700
208		C	480 650 780	133 181 217	150 145 132		560	64		
209	250-390(I)		400.0 1052.0 1224.0	111.1 292.2 340.0	50.0 39.0 31.0	1480	160	88	4.5	700
210		A	380.0 967.7 1134.0	105.6 268.8 315.0	42.5 33.0 27.0		132	86		
211		B	379.0 915.3 1062.0	105.3 254.3 295.0	36.0 27.0 22.0		110	83		
212		C	350.0 843.3 972.0	97.2 234.3 270.0	27.0 20.0 15.0		75	77.5		
213	250-390		400.0 1030.5 1188.0	111.1 286.3 330.0	47.0 37.0 30.0	1480	160	87	4	700
214		A	390.0 958.3 1116.0	108.3 266.2 310.0	41.0 32.0 26.0		132	86		
215		B	375.0 880.3 954.0	104.2 244.5 265.0	38.0 27.0 24.5		110	84		
216		C	350.0 819.6 936.0	97.2 227.7 260.0	28.0 22.0 18.0		75	82		
217	250-470(I)		420.0 1174.5 1368.0	116.7 326.3 380.0	84.0 63.0 50.0	1480	280	87	5	1160
218		A	400.0 1072.2 1242.0	111.1 297.8 345.0	72.0 55.0 44.0		220	85		
219		B	370.0 975.2 1134.0	102.8 270.9 315.0	60.0 45.5 40.0		200	83		
220		C	330.0 903.3 1044.0	91.7 250.9 290.0	49.6 37.5 31.2		160	80		
221	250-470		400.0 1081.0 1260.0	111.1 300.3 350.0	72.0 54.5 45.0	1480	220	84	4.5	1160
222		A	370.0 1003.9 1152.0	102.8 278.9 320.0	63.0 47.0 40.0		200	82.5		
223		B	350.0 911.0 1044.0	97.2 253.0 290.0	54.0 40.5 37.0		160	80.5		
224		C	340.0 830.0 954.0	94.4 230.6 265.0	45.0 34.5 30.0		132	78.5		
225	250-550		900.0 1150.0 1350.0	250.0 319.0 375.0	98.0 90.0 81.0	1480	400	85	4.5	990
226		A	850.0 1100.0 1300.0	236.0 306.0 361.0	99.0 81.0 70.0		355	83		
227		B	800.0 1050.0 1250.0	222.0 292.0 347.0	82.0 74.0 64.0		315	81		
228		C	750.0 1000.0 1200.0	208.0 278.0 333.0	74.0 67.0 58.0		280	79		

FLUGO reserves the right to change the technical data and dimensions in order to update or improve its product without prior notice.

FASAS type pump performance

No.	Pump type		Capacity (m^3/h)	Capacity (L/s)	Head (m)	Speed (r/min)	Motor power (kw)	Eff. (%)	(NPSH)r (m)	Weight (kg)
229	250-600		780 1200 1400	216.7 333.3 388.9	127 120 114	1480	560	81	5.5	1550
230		A	700 1100 1300	194.4 305.6 361.1	112.5 105 98.5		450	80		
231		B	650 1000 1170	180.6 277.8 325.0	91 85 80		355	79		
232	250-820		730 1200 1440.0	203 333 400.0	192 186 169	1480	1000	79	4.5	2000
233		A	700 1150 1380.0	194 319 383.3	173 164 150		900	78		
234		B	670 1100 1314.0	186 306 365.0	155 148 130		800	77		
235	300-330(I)		500.0 1099.0 1314.0	138.9 305.3 365.0	31.0 23.0 16.0	1480	110	86	5.7	900
236		A	480.0 1020.0 1224.0	133.3 283.3 340.0	27.0 19.8 14.0		90	84.5		
237		B	460.0 970.0 1170.0	127.8 269.4 325.0	22.0 15.5 11.0		75	82		
238		C	440.0 920.0 1098.0	122.2 255.6 305.0	18.0 11.5 7.5		45	80		
239	300-330		400.0 940.0 1134.0	111.1 261.1 315.0	30.0 23.0 18.5	1480	90	85	5.3	900
240		A	390.0 876.6 1044.0	108.3 243.5 290.0	26.0 20.0 16.0		75	84		
241		B	370.0 801.0 954.0	102.8 222.5 265.0	21.0 16.7 13.0		55	81		
242		C	350.0 705.0 846.0	97.2 195.8 235.0	17.0 13.7 9.0		37	77		
243	300-450(I)		700.0 1678.5 1980.0	194.4 466.3 550.0	67.5 53.0 45.0	1480	315	88	5.2	1400
244		A	660.0 1576.8 1890.0	183.3 438.0 525.0	56.0 45.0 37.0		280	86.5		
245		B	620.0 1476.0 1764.0	172.2 410.0 490.0	45.0 36.5 30.0		200	84		
246		C	600.0 1360.8 1450.0	166.7 378.0 402.8	35.0 27.5 24.5		160	79		
247	300-450		600.0 1620.0 1944.0	166.7 450.0 540.0	64.0 51.5 42.0	1480	315	87.5	5.5	1400
248		A	580.0 1519.2 1818.0	161.1 422.0 505.0	57.0 45.0 37.0		250	86.5		
249		B	560.0 1422.0 1710.0	155.6 395.0 475.0	46.0 37.5 31.0		200	84		
250		C	540.0 1332.0 1620.0	150.0 370.0 450.0	38.0 30.5 25.0		160	81.5		

FAS type pump performance

No.	Pump type		Capacity (m^3/h)	Capacity (L/s)	Head (m)	Speed (r/min)	Motor power (kw)	Eff. (%)	(NPSH)r (m)	Weight (kg)
251	300-550(I)		700.0 1750.0 2106.0	194.4 486.1 585.0	104.0 94.0 82.0	1480	630	86	4.7	1800
252		A	680.0 1645.2 1980.0	188.9 457.0 550.0	86.0 76.0 68.0		500	85.5		
253		B	650.0 1573.2 1890.0	180.6 437.0 525.0	71.0 62.0 55.0		450	85		
254		C	620.0 1515.6 1818.0	172.2 421.0 505.0	59.0 50.0 43.0		315	83.5		
255	300-550		600.0 1550.0 1854.0	166.7 430.5 515.0	91.0 80.0 73.0	1480	500	84.5	5	1800
256		A	590.0 1447.2 1728.0	163.9 402.0 480.0	76.0 67.0 60.0		400	83.5		
257		B	580.0 1360.8 1638.0	161.1 378.0 455.0	63.0 57.0 50.0		315	83		
258		C	570.0 1281.6 1530.0	158.3 356.0 425.0	54.0 47.5 42.0		250	82		
259	300-710(I)		900.0 1836.0 2100.0	250.0 510.0 583.3	168.0 156.0 149.0	1480	1250	85	5	2100
260		A	960.0 1735.2 2030.0	266.7 482.0 563.9	147.0 136.0 129.0		1000	84.6		
261		B	800.0 1623.6 1880.0	222.2 451.0 522.2	122.0 112.0 107.0		800	84.3		
262		C	700.0 1537.2 1600.0	194.4 427.0 444.4	100.0 91.0 90.0		560	84		
263	300-710		600.0 1690.0 2016.0	166.7 469.4 560.0	150.0 139.0 123.0	1480	1000	83.5	4.5	2100
264		A	580.0 1573.2 1890.0	161.1 437.0 525.0	128.0 119.0 107.0		800	83		
265		B	540.0 1450.8 1746.0	150.0 403.0 485.0	108.0 99.0 90.0		630	82.5		
266		C	510.0 1342.8 1650.0	141.7 373.0 458.3	90.0 81.0 74.0		450	82		
267	350-380(I)		600.0 1548.0 1836.0	166.7 430.0 510.0	44.5 33.0 21.0	1480	200	86.5	8	1200
268		A	580.0 1450.0 1728.0	161.1 470.0 480.0	39.0 30.0 20.5		160	85		
269		B	560.0 1400.0 1674.0	155.5 456.0 465.0	34.0 25.0 17.0		132	83		
270		C	540.0 1300.0 1566.0	150.0 445.0 435.0	27.9 21.0 15.0		110	80.5		
271	350-380		500.0 1424.0 1710.0	138.9 395.6 475.0	42.5 31.0 21.8	1480	160	85.5	6.7	1200
272		A	460.0 1335.6 1602.0	127.8 371.0 445.0	37.9 26.3 17.0		132	84		

FLUGO reserves the right to change the technical data and dimensions in order to update or improve its product without prior notice.

FAS type pump performance

No.	Pump type		Capacity (m^3/h)	Capacity (L/s)	Head (m)	Speed (r/min)	Motor power (kw)	Eff. (%)	(NPSH)r (m)	Weight (kg)
273	350-380	B	430.0 1270.8 1530.0	119.4 353.0 425.0	32.5 22.5 15.5	1480	110	82	6.7	1200
274		C	410.0 1188.0 1400.0	113.9 330.0 388.9	27.5 17.8 17.1		90	78		
275	350-450(I)		1500 2200 2500	416.7 611.1 694.4	55 43 36	1480	355	85	6	1650
276		A	1400 2106 2350	388.9 585.0 652.8	47.5 37 31.5		280	84		
277		B	1330 1998 2230	369.4 555.0 619.4	43 33 28.5		250	83		
278		C	1240 1836 2050	344.4 510.0 569.4	37 28.5 24.5		200	81		
279	350-450		1400 2170 2440	388.9 602.8 677.8	51 39.5 34	1480	315	84	6	1650
280		A	1370 2050 2300	380.6 569.4 638.9	45.4 35 30		280	83		
281		B	1290 1930 2160	358.3 536.1 600.0	40 31 26.5		220	82		
282		C	1200 1800 2020	333.3 500.0 561.1	35 27 23		200	80		
283	350-530(I)		1350.0 2200.0 2646.0	375.0 725.0 735.0	94.0 74.0 61.0	1480	630	88.5	5	1800
284		A	1100.0 2106.0 2520.0	305.6 585.0 700.0	82.0 67.0 55.0		560	87		
285		B	750.0 1998.0 2394.0	208.3 555.0 665.0	78.0 59.0 49.0		450	86		
286		C	505.0 1836.0 2196.0	140.3 510.0 610.0	65.0 50.5 41.5		355	85		
287	350-530		850 2450 3350	236.1 680.6 930.6	92 67 47.5	1480	630	88	5	1800
288		A	800 2268 3200	222.2 630 888.9	81.5 59.5 38		500	87		
289		B	750 2000 2268	208.3 525 630	71 54 44.5		400	85		
290		C	700 1944 2300	194.4 540 639	60 41.5 30.5		355	83		
291	350-610		1700 2160 2600	472.2 600.0 722.2	123 114 97	1480	900	82	8.5	2500
292		A	1665 2100 2500	462.5 583.3 694.4	116 107 92		900	81.5		
293		B	1600 2000 2400	444.4 555.6 666.7	108 100 90		800	81		
294	350-640		1470 2160 2448	408.3 600 680	138.5 126.2 116	1480	1000	85	7.5	2570
295		A	1290 2000 2376	358.3 556 660	128 116 107		900	84		

FAS type pump performance

No.	Pump type		Capacity (m^3/h)	Capacity (L/s)	Head (m)	Speed (r/min)	Motor power (kw)	Eff. (%)	(NPSH)r (m)	Weight (kg)
296	350-640	B	1185 1920 2304	329.2 533.3 640	117.8 106 96	1480	800	82	7.5	2570
297		C	1110 1830 2196	308.3 508.3 610	107.8 95.6 88		710	80		
298		D	1050 1695 2052	291.7 470.8 570	93.8 83 76		560	78		
299	350-800		2100 2650 3000	583 736 833	208 195 180	1480	2000	82	7.5	2900
300		A	2050 2500 2900	569 694 806	188 175 162		1800	81.5		
301		B	1950 2400 2800	542 667 778	170 160 145		1600	81		
302		C	1800 2200 2500	500 611 694	147 140 130		1250	80.5		
303	400-550(I)		1535 2635 3100	426.3 731.9 861	98 86 75	1480	800	85	7.5	2100
304		A	1470 2520 3024	408.3 700 840	91 77 66		710	83		
305		B	1420 2418 2890	394 671.6 805	82.6 71.8 63		630	81		
306		C	1400 2311.5 2772	388.9 642 770	76 64 58		630	79		
307		D	1380 2235.6 2682	383.3 621 745	69 57.8 52		560	77		
308	400-550		1320 2190 2628	366.7 608.3 730	77 63.8 54	1480	500	86	7	2100
309		A	1280 2045.5 2448	355.6 568.2 680	69.8 57.8 48		450	84		
310		B	1230 1882 2450	341.7 522.7 680.6	61.2 51.2 39		400	82		
311		C	1211 1767.6 2106	336.4 491 585	53.2 45 38		315	80		
312	400-600		1571 2502 3006	436.4 695 835	101.2 85 76	1480	800	86	8.5	2500
313		A	1508 2422 2898	419 672.7 805	93.2 78 71		710	84		
314		B	1500 2354 2826	416.7 654 785	86 74 64		630	82		
315		C	1470 2225.5 2664	410 618.2 740	78.8 68 61		560	80		
316		D	1505 2127.6 2500	418.2 591 722	69 59.8 55		500	78		
317	400-600(I)		1919 3050 3654	533 847.2 1015	129.7 106 90	1480	1250	86	9	2500
318		A	1780 2950 3474	494.4 835.3 965	119 100 88		1120	84		

FLUGO reserves the right to change the technical data and dimensions in order to update or improve its product without prior notice.

FAS type pump performance

No.	Pump type		Capacity (m^3/h)	Capacity (L/s)	Head (m)	Speed (r/min)	Motor power (kw)	Eff. (%)	(NPSH)r (m)	Weight (kg)
319	400-600(I)	B	1740 2922.4 3510	483.3 811.8 975	109.2 93 77	1480	1000	82	9	2500
320		C	1600 2732 3312	444.4 758.8 920	99.8 83.7 69		900	80		
321		D	1530 2641.6 3186	425 706 885	90 74 61		800	78		
322	400-660		2466 3510 4032	685 975 1120	150 138 128	1480	1800	84	10	2700
323		A	2394 3402 3906	665 945 1085	142 130 120		1600	83		
324		B	2322 3294 3780	645 915 1050	134 122 112		1600	82		
325		C	2232 3186 3654	620 885 1015	126 114 104		1400	81		
326		D	2178 3096 3546	605 860 985	118 106 96		1250	80		
327	500-520(I)		1415 2397 2950	393 666 819	18.4 13.9 9.8	730	132	85	4.3	2800
328		A	1363 2300 2831	379 639 786	16.9 12.8 9.0		110	83		
329		B	1304 2208 2719	362 613 755	15.9 11.7 8.5		110	82		
330		C	1251 2120 2596	348 589 721	14.4 10.2 7.2		90	80		
331		D	1192 2035 2369	331 565 658	13.2 9.0 6.5		75	78		
332			1900 3096 3726	527.8 860 1035	33.2 27 20	980	315	87	6.5	2800
333		A	1830 3024 3629	508.3 840 1008	30.5 23 17.5		280	86		
334		B	1750 2964.5 3564	486 823.3 990	26.5 20.5 16		220	84		
335		C	1680 2846 3384	466.7 790.6 940	24 18.4 14		200	82		
336		D	1600 2732 3180	444.4 758.9 883.3	21 16.3 13		185	80		
337	500-520		1102 2069 2682	306 575 745	17.4 12.5 7.8	730	110	84	3.8	3200
338		A	1043 1965 2548	290 546 708	15.4 10.8 6.8		90	82		
339		B	931.1 1850 2235	259 514 621	12.2 8.7 6.2		75	80		
340		C	864.1 1623 2078	240 451 577	10.3 7.7 5.1		75	76		
341			1480 2777 3330	411 771.4 925	29 22.5 17	980	250	86	6	3200

FAS type pump performance

No.	Pump type		Capacity (m^3/h)	Capacity (L/s)	Head (m)	Speed (r/min)	Motor power (kw)	Eff. (%)	(NPSH)r (m)	Weight (kg)
342	500-520	A	1400 2638 3204	388.9 732.8 890	25 19.5 14.5	980	200	84	6	3200
343		B	1250 2484 3000	347.2 690 833.3	22 17 13		185	81		
344		C	1160 2268 2700	322.2 630 750	18 15 12		132	78		
345	500-650(I)		1862 2384 2793	517 662 776	30.5 27.7 24.7	730	280	85	3.8	4100
346		A	1788 2272 2719	497 631 755	27.7 25.0 22.2		250	83		
347		B	1713 2160 2607	476 600 724	25.0 22.7 19.7		200	82		
348		C	1639 2048 2458	455 569 683	23.9 20.5 18.0		185	80		
349		D	1490 1937 2309	414 538 641	20.5 18.0 15.5		132	78		
350			2500 3200 3750	694 889 1042	54 50 43	980	630	88	6.1	4100
351		A	2400 3050 3650	667 847 1014	49 45 38		560	86		
352		B	2300 2900 3500	639 806 972	44 41 35		450	84		
353		C	2200 2750 3300	611 764 917	40 37 31		400	82		
354		D	2000 2600 3100	556 722 861	36 32.5 28		315	80		
355	500-650		1356 2229 2898	377 619 805	23.2 18.7 12.9	730	160	84	3.8	4100
356		A	1289 2112 2752	358 587 765	21.0 16.8 11.7		132	82		
357		B	1218 2028 2600	338 563 722	18.9 15.4 10.5		132	80		
358		C	1143 1968 2443	318 547 679	16.1 13.3 9.4		110	76		
359			1820 2992 3582	505.6 831.3 995	44 33.7 27	980	355	87	5.8	4100
360		A	1730 2835 3402	480.6 787.5 945	39 30.2 24		315	86		
361		B	1635 2722.5 3276	454 756.3 910	36 27.7 22		280	82		
362		C	1535 2642.5 3168	426.4 706 880	32 24 19		250	78		
363	500-710		1713 2869 3754	476 797 1043	40.6 35.7 30.0	730	400	85	4.2	4500
364		A	1639 2735 3605	455 760 1001	37.3 32.8 26.1		355	83		

FLUGO reserves the right to change the technical data and dimensions in order to update or improve its product without prior notice.

FAS type pump performance

No.	Pump type		Capacity (m^3/h)	Capacity (L/s)	Head (m)	Speed (r/min)	Motor power (kw)	Eff. (%)	(NPSH)r (m)	Weight (kg)
365	500-710	B	1564 2585 3218	435 718 894	33.5 29.4 23.9	730	315	82	4.2	4500
366		C	1490 2387 2950	414 663 819	31.3 26.5 21.6		250	80		
367		D	1430 2253 2644	397 626 735	27.7 23.3 19.0		220	78		
368			2300 3852 4626	638.9 1070 1285	73.1 64.4 54	980	900	88.5	5.5	4500
369		A	2200 3672 4410	611.1 1020 1225	67.2 59.2 50		800	87		
370		B	2100 3470.4 4158	583.3 964 1155	60.3 53 45		710	85		
371		C	2000 3204 3834	555.6 890 1065	56.4 47.7 41		560	83		
372		D	1920 3024 3550	533.3 840 986.1	50 42 38		500	81		
373	500-770		2600 3800 5000	722.2 1055.6 1388.9	197 185 164	1480	2800	83	11	4000
374		A	2500 3670 4600	694.4 1019.4 1277.8	183.5 172 155		2500	82.5		
375		B	2400 3550 4200	666.7 986.1 1166.7	171 160 149		2240	82		
376	500-800(I)		1929 2977 3866	536 827 1074	49.2 44.7 33	730	500	87	4.1	4900
377		A	1832 2682 3486	509 745 968	43.5 40.4 31.5		400	85		
378		B	1743 2387 3054	484 663 848	38.7 36.2 30.5		355	83		
379		C	1639 2145 2682	455 596 745	33.8 32.2 28.9		280	81		
380			2590 3996 4788	719.4 1110 1330	88.7 80.6 59	980	1120	89	6.9	4900
381		A	2460 3600 4320	683.3 1000 1200	78.4 72.8 61.8		900	87		
382		B	2340 3204 3834	650 890 1065	69.8 65.3 57		800	85		
383		C	2200 2880 3600	611.1 800 1000	61 58 49		630	83		
384	500-800		1777 2588 3427	493 719 952	39.2 34.7 26.4	730	355	86	3.9	4900
385		A	1687 2481 3255	469 689 904	35.0 31.0 24.4		315	84		
386		B	1602 2346 3091	445 652 859	31.2 27.5 21.8		250	82		
387		C	1527 2212 2935	424 615 815	26.6 24.2 19.9		220	78		

FAS type pump performance

No.	Pump type		Capacity (m^3/h)	Capacity (L/s)	Head (m)	Speed (r/min)	Motor power (kw)	Eff. (%)	(NPSH)r (m)	Weight (kg)
388	500-800		2385 3474 4600	662.5 965 1277.8	70.7 62.5 47.5	980	800	88	5.2	4900
389		A	2265 3330 4370	629 925 1213.9	63.1 55.8 44		710	86		
390		B	2150 3150 4150	597.2 875 1152.8	56.2 49.6 39.2		560	84		
391		C	2050 2970 3940	569.7 825 1094	48 43.6 35.8		500	80		
392	500-860(I)		1877 3116 3708	521 866 1030	68.8 61.7 51	730	710	87	4.3	5000
393		A	1773 2977 3564	492 827 990	62.4 55.9 47.7		630	85		
394		B	1676 2816 3628	466 782 1008	56.8 50.2 43.0		560	81		
395		C	1575 2628 3218	438 730 894	50.2 44.6 39.2		500	78		
396			2520 3888 4680	700 1080 1300	116 110 103.5	980	1600	89	6.9	5000
397		A	2380 3762 4518	661.1 1045 1255	105 99 94		1400	87		
398		B	2250 3258 3906	625 905 1085	99 94 87		1250	83		
399		C	2115 3114 3744	587.5 865 1040	92 87 81		1120	80		
400	500-860		1788 2682 3486	497 745 968	55.3 49.9 40.5	730	500	86	3.8	5000
401		A	1713 2601 3352	476 723 931	51.8 46.0 37.7		450	84		
402		B	1639 2521 3203	455 700 890	48.4 42.8 35.4		400	82		
403		C	1557 2387 3043	432 663 845	44.9 39.5 32.7		355	80		
404		D	1479 2295 2868	411 638 797	41.6 36.5 30.9		355	78		
405			2400 3600 4320	666.7 1000 1200	99.6 90 73	980	1120	88.5	5.5	5000
406		A	2300 3492 4176	638.9 970 1160	93.4 82.9 68		1000	86		
407		B	2200 3384 4050	611.1 940.3 1125	87.2 77.2 63.8		900	84		
408		C	2090 3204 3834	580.6 890 1065	81 71.2 59		800	82		
409		D	1985 3081.6 3672	551.4 856 1020	75 65.8 55.6		800	80		
410	500-1000		2400 3600 4320	666.7 1000.0 1200.0	138 128 119	980	1800	85	6.5	4600

FLUGO reserves the right to change the technical data and dimensions in order to update or improve its product without prior notice.

FAS type pump performance

No.	Pump type		Capacity (m^3/h)	Capacity (L/s)	Head (m)	Speed (r/min)	Motor power (kw)	Eff. (%)	(NPSH)r (m)	Weight (kg)
411	500-1000	A	2300 3492 4176	638.9 970.0 1160.0	126 117 108	980	1600	84	6.5	4600
412		B	2200 3384 4000	611.1 940.0 1111.1	118 109 100		1400	83		
413		C	2090 3204 3834	580.6 890.0 1065.0	110 103 95		1400	82		
414	500-1050		1564 2607 3352	435 724 931	96.0 83.2 69.4	730	900	83	3.5	10800
415		A	1453 2421 3147	403 672 874	89.9 76.6 61.0		800	82		
416		B	1341 2235 2905	372 621 807	79.3 69.4 55.5		710	81		
417		C	1274 2123 2760	354 590 767	76.6 62.1 48.8		630	80		
418			2100 3500 4068	583 972 1130	159 150 140	980	2000	85	6	10800
419		A	1950 3250 3888	542 903 1080	145 138 132		1800	84		
420		B	1800 3000 3600	500 833 1000	132 125 118		1600	83		
421		C	1710 2850 3420	475 792 950	118 112 104		1400	82		
422	500-1060		3400 5500 6300	944.4 1527.8 1750.0	186 170 156	980	3550	87	6	11000
423		A	3000 5000 5750	833.3 1388.9 1597.2	174 158 148		3150	86		
424		B	2700 4500 5175	750.0 1250.0 1437.5	160 146 136		2800	85		
425		C	2400 4000 4600	666.7 1111.1 1277.8	146 134 125		2240	84		
426	600-560(I)		2339.0 3513.0 4544.0	649.7 975.8 1262.2	17.7 13.4 7.9	730	185	85	5.3	3900
427		A	2212.0 3298.0 4224.0	614.4 916.1 1173.3	15.0 11.9 6.5		160	84		
428		B	2078.0 3014.0 3765.0	577.2 837.2 1045.8	12.5 9.9 6.1		132	81		
429		C	1952.0 2821.0 3620.0	542.2 783.6 1005.6	10.5 8.5 5.0		110	79		
430			3750 4716 5652	1041.7 1310.0 1570.0	27 23 16	980	400	86	8	3900
431		A	3600 4428 5310	1000.0 1230.0 1475.0	24.5 21.5 15.5		355	85		
432		B	3300 4046.4 4842	916.7 1124.0 1345.0	20.5 17.8 13		280	83		
433		C	3060 3787 4536	850.0 1051.9 1260.0	17.5 15.4 11		250	81		

FAS type pump performance

No.	Pump type		Capacity (m^3/h)	Capacity (L/s)	Head (m)	Speed (r/min)	Motor power (kw)	Eff. (%)	(NPSH)r (m)	Weight (kg)
434	600-560		1788 2682 3486	497 745 968	15.2 11.2 7.4	730	132	83	4.3	3900
435		A	1713 2601 3352	476 723 931	13.4 9.9 6.4		110	81		
436		B	1639 2521 3203	455 700 890	11.5 8.7 5.5		90	79		
437		C	1557 2387 3043	432 663 845	9.6 7.2 4.7		75	77		
438			2665 3996 4752	740 1110 1320	27.4 20.2 15	980	355	85	7.5	3900
439		A	2545 3744 4464	707 1040 1240	23.5 17.8 13		280	83		
440		B	2420 3461.5 4140	672.2 961.5 1150	20 15.63 11.5		220	81		
441		C	2300 3157 3780	639 877 1050	17 13 9.5		185	79		
442	600-630(I)		2361 3528 4425	656 980 1229	26.1 21.6 16.6	730	280	86	5	4000
443		A	2220 3292 4157	617 915 1155	22.6 18.9 14.4		250	84		
444		B	2086 3039 3754	579 844 1043	19.2 16.1 12.9		200	82		
445		C	1959 2797 3315	544 777 921	16.1 13.8 11.2		160	78		
446			3170 4736.5 5652	880.6 1315.7 1570	47 39 30	980	630	88	8	4000
447		A	2980 4420 5292	827.8 1230 1470	40.8 34.1 26		560	86		
448		B	2800 4080 4896	777.8 1133 1360	34.6 29.1 23.2		450	84		
449		C	2630 3755 4450	730.6 1043 1236	29 24.8 20.2		355	80		
450	600-630		1788 2765 3456	497 768 960	22.1 18.3 14.0	730	200	85	4.6	4000
451		A	1676 2564 3248	466 712 902	19.3 16.1 12.2		160	83		
452		B	1583 2363 2972	440 656 826	16.6 13.9 11.1		132	81		
453		C	1490 2196 2682	414 610 745	13.6 11.9 10.0		110	78		
454			2400 3712.5 4640	667 1031 1288.9	39.8 33 25.2	980	450	87	6.8	4000
455		A	2250 3442.5 4122	625 956 1145	34.8 29 24		355	85		
456		B	2125 3172.5 3816	590 881 1060	30 25 22		315	83		
457		C	2000 2947.5 3600	555.6 818.8 1000	24.5 21.4 18		250	81		

FLUGO reserves the right to change the technical data and dimensions in order to update or improve its product without prior notice.

FAS type pump performance

No.	Pump type		Capacity (m^3/h)	Capacity (L/s)	Head (m)	Speed (r/min)	Motor power (kw)	Eff. (%)	(NPSH)r (m)	Weight (kg)
458	600-720(I)		2171 3449 4507	603 958 1252	38.2 32.4 24.1	730	400	87	4.6	4900
459		A	2041 3218 4231	567 894 1175	33.3 27.7 20.0		355	85		
460		B	1933 3017 3888	537 838 1080	29.1 23.9 17.3		280	83		
461		C	1806 2795 3486	502 776 968	24.3 19.5 14.9		220	81		
462			3240 4630 5292	900 1286 1470	64 58.4 52	980	1000	89	6.5	4900
463		A	3060 4320 5040	850 1200 1400	54 50 42		800	87		
464		B	2880 4050 4860	800 1125 1350	47 43 36		710	85		
465		C	2628 3752 4500	730 1042 1250	38 35.2 29		500	83		
466	600-720		1944 2673 3464	540 742 962	34.3 29.8 21.6	730	315	86	4	4900
467		A	1825 2467 3248	507 685 902	29.0 25.4 18.2		250	84		
468		B	1724 2313 2980	479 642 828	25.6 22.5 17.1		200	82		
469		C	1602 2162 2771	445 601 770	22.1 19.5 9.7		185	80		
470			2610 3588 4320	725 994 1200	55 53.7 49	980	800	88	5.2	4900
471		A	2450 3312 3960	680.6 920 1100	48 45.8 42		630	86		
472		B	2315 3105 3744	643.1 862.5 1040	42 40.5 38		500	84		
473		C	2150 2902.5 3792	597 806 978	37 35.1 31		400	82		
474	600-740		2800 4100 5100	777.8 1138.9 1416.7	80 72 60	980	1120	86	7	4320
475		A	2600 3800 4800	722.2 1055.6 1333.3	72.5 65 51.5		1000	85		
476		B	3460 3500 4300	961.1 972.2 1194.4	65 56 50		800	84		
477		C	2200 3200 3700	611.1 888.9 1027.8	58 51 46.5		630	83		
478	600-860(I)		2793 4125 5147	776 1146 1430	48.6 48.6 38.8	730	710	87	5.2	5300
479		A	2626 3806 4834	729 1057 1343	50.5 42.7 32.2		630	85		
480		B	2458 3486 4283	683 968 1190	43.3 36.3 29.4		500	83		

FAS type pump performance

No.	Pump type		Capacity (m^3/h)	Capacity (L/s)	Head (m)	Speed (r/min)	Motor power (kw)	Eff. (%)	(NPSH)r (m)	Weight (kg)
481	600-860(I)	C	2235 3244 3762	621 901 1045	36.1 31.1 25.5	730	400	81	5.2	5300
482			3750 5538 6910	763.9 1538.3 1919.4	95 87.5 73	980	1800	89	8.5	5300
483		A	3525 5109 6490	949.2 1419.2 1803	85 77 66		1600	87		
484		B	3300 4680 5750	916.7 1300 1597	72 65.5 58		1250	85		
485		C	3000 4355 5050	833.3 1209 1403	61 56 52		1000	83		
486	600-860		1944 2673 3464	540 742 962	42.9 36.7 28.1	730	450	86	3.9	5300
487		A	1825 2467 3248	507 685 902	38.3 32.3 23.3		355	84		
488		B	1724 2313 2980	479 642 828	33.4 27.9 20.5		315	82		
489		C	1602 2162 2771	445 601 770	28.9 23.5 17.9		250	78		
490			2950 4356 5220	819.4 1210 1450	71.5 66.2 60	980	1120	88	5.9	5300
491		A	2800 4100 4860	777.8 1138.9 1350	65 58.2 53		900	86		
492		B	2650 3818.8 4500	736 1060.8 1250	56 50.2 45		710	84		
493		C	2490 3482 4140	691.7 967.3 1150	48 42.4 38		560	80		
494	600-900		4000 5500 6200	1111.1 1527.8 1722.2	128 120 111	980	2240	88	8	5600
495		A	3600 5000 5600	1000.0 1388.9 1555.6	117.5 110 102.5		2000	87		
496		B	3400 4500 5200	944.4 1250.0 1444.4	107 100 92		1600	86		
497		C	2650 4200 5000	736.1 1166.7 1388.9	99 90 80		1400	85		
498	700-500		3400 4500 5100	944.4 1250.0 1416.7	23 18 14	980	315	84	7.5	4800
499		A	3200 4200 4800	888.9 1166.7 1333.3	21 16.5 13		280	83		
500		B	3050 4000 4600	847.2 1111.1 1277.8	19 15.5 12		250	82		
501		C	2900 3800 4400	805.6 1055.6 1222.2	18 14.5 11		220	81		
502	700-580(I)		3177 4892 6034	882 1359 1676	21.0 16.5 12.5	730	315	85	6.3	5400
503		A	3114 4709 5840	865 1308 1622	19.1 15.4 11.8		280	83		

FLUGO reserves the right to change the technical data and dimensions in order to update or improve its product without prior notice.

FAS type pump performance

No.	Pump type		Capacity		Head (m)	Speed (r/min)	Motor power (kw)	Eff. (%)	(NPSH)r (m)	Weight (kg)
			(m^3/h)	(L/s)						
504	700-580(I)	B	2957 4505 5549	821 1251 1542	17.4 14.4 11.6	730	250	81	6.3	5400
505		C	2808 4391 5214	780 1220 1448	16.0 13.3 11.1		220	79		
506			4265 6568 8100	1185 1824.4 2250	37.8 29.8 22	980	710	87	8.8	5400
507		A	4180 6322 7840	1161 1756 2177.8	34.4 27.8 21		630	85		
508		B	3970 6048 7450	1103 1680 2069	31.3 25.9 20		560	83		
509		C	3770 5895 7000	1047.2 1637.5 1944	28.8 24 19		500	81		
510	700-580		2376 3701 4827	660 1028 1341	19.0 13.0 6.0	730	185	85	5.3	5400
511		A	2257 3538 4581	627 983 1273	17.3 12.0 6.0		160	83		
512		B	2153 3398 4350	598 944 1208	15.5 11.0 5.9		132	81		
513			3960 4968 5958	1100 1380 1655	27 23.5 17	980	400	87	8	5400
514		A	3312 4749 5688	920 1319 1580	26 21.6 15.5		355	85		
515		B	3186 4562 5472	885 1267 1520	23 19.8 14		315	83		
516	700-700(I)		2719 4854 6309	755 1348 1753	32.5 24.1 15.6	730	450	82	6	6700
517		A	2607 4676 5996	724 1299 1666	30.2 22.3 14.5		400	81		
518		B	2503 4448 5631	695 1235 1564	28.0 20.4 14.0		355	80		
519		C	2402 4277 5311	667 1188 1475	25.0 17.6 12.7		315	79		
520			4212 6012 7200	1170 1670 2000	57 45 32	980	1120	83	8.8	6700
521		A	4032 5760 6840	1120 1600 1900	52 41.5 31		1000	82		
522		B	3852 5490 6408	1070 1525 1780	47 38 29		900	81		
523		C	3672 5220 5868	1020 1450 1630	42 34.5 28		710	80		
524	700-700		2589 4186 5311	719 1163 1475	28.3 21.8 15.4	730	355	84	5.5	6700
525		A	2458 3996 4879	683 1110 1355	25.1 19.3 14.7		315	82		
526		B	2354 3727 4618	654 1035 1283	22.3 17.4 13.4		250	80		

FAS type pump performance

No.	Pump type		Capacity (m^3/h)	Capacity (L/s)	Head (m)	Speed (r/min)	Motor power (kw)	Eff. (%)	(NPSH)r (m)	Weight (kg)
527	700-700	C	2235 3450 4291	621 958 1192	19.7 15.1 11.8	730	220	78	5.5	6700
528			3475 5619 6462	965.3 1560.8 1795	51 39.2 32.5	980	900	86	8.5	6700
529		A	3300 5365 6174	916.7 1790 1715	45.2 34.8 28		800	84		
530		B	3160 5004 5760	877.8 1390 1600	40.2 31.4 25		630	82		
531		C	3000 4631.5 5328	833.3 1286.5 1480	35 27.2 21.2		500	80		
532	700-830(I)		3486 5524 7337	968 1534 2038	51.6 44.2 32.2	730	900	87	6	6700
533		A	3296 5184 6838	916 1440 1899	45.4 37.6 26.6		710	85		
534		B	3129 4881 6272	869 1356 1742	39.3 32.2 23.7		630	83		
535		C	2942 4478 5602	817 1244 1556	32.7 26.4 20.0		450	81		
536			4680 6750 7596	1300 1875 2110	97 90 84	980	2240	89	8.8	6700
537		A	4626 6588 7272	1285 1830 2020	92 85 82		2240	87		
538		B	4536 6426 7092	1260 1785 1970	88 81 78		2000	85		
539		C	4392 6228 6912	1220 1730 1920	82 76 73		1800	83		
540	700-830		2581 4022 4931	717 1117 1370	40.0 33.3 25.5	730	500	86	5	6700
541		A	2436 3687 4395	677 1024 1221	35.2 29.9 23.4		400	84		
542		B	2287 3284 3918	635 912 1088	30.5 25.8 21.5		315	82		
543		C	2149 2904 3464	597 807 962	26.1 22.9 19.5		280	80		
544			4410 6300 7200	1225 1750 2000	70 60 52	980	1400	88	7.5	6700
545		A	4194 5994 6912	1165 1665 1920	63.5 53.8 45.5		1250	86		
546		B	4032 5760 6624	1120 1600 1840	58 48.5 42		1120	84		
547		C	3888 5526 6372	1080 1535 1770	54 45 39		1000	82		

FLUGO reserves the right to change the technical data and dimensions in order to update or improve its product without prior notice.

FAS type pump performance

No.	Pump type		Capacity (m^3/h)	Capacity (L/s)	Head (m)	Speed (r/min)	Motor power (kw)	Eff. (%)	(NPSH)r (m)	Weight (kg)
548	800-770(I)		4744 7347 8890	1318 2041 2470	23.9 17.5 11.9	590	450	85	6.3	7800
549		A	4506 6968 8381	1252 1936 2328	21.9 15.9 10.6		400	83		
550		B	4280 6692 7961	1189 1859 2211	20.2 14.6 9.7		400	81		
551		C	4065 6353 7508	1129 1765 2086	18.4 12.9 8.8		315	79		
552			6300 8928 10224	1750 2480 2840	39.5 31 25.5	730	1000	87	8	7800
553		A	6048 8622 9900	1680 2395 2750	33.6 24.3 17		800	85		
554		B	5796 8280 9522	1610 2300 2645	30.9 22.3 15.5		710	83		
555		C	5544 7860 9036	1540 2183.3 2510	27 19.8 14		630	81		
556	800-770		3900 5878 7419	1083 1633 2061	19.5 14.6 9.1	590	315	84	5.4	7800
557		A	3706 5630 7048	1029 1564 1958	18.2 13.5 8.2		280	82		
558		B	3520 5333 6660	978 1482 1850	16.4 12.1 7.4		250	80		
559		C	3342 5048 6223	928 1402 1729	14.9 10.8 6.9		220	78		
560			5112 7273 8352	1420 2020 2320	29 22.3 18	730	630	86	7.5	7800
561		A	4896 6966 7920	1360 1935 2200	26.5 20.6 16		560	84		
562		B	4644 6599 7560	1290 1833 2100	47 18.5 14.5		450	82		
563		C	4392 6246 7164	1220 1735 1990	21.5 16.5 13.0		400	80		
564	800-850		6120 8600 11000	1700.0 2388.9 3055.6	55 51 43.5	730	1600	88	9	8000
565		A	5750 8100 10000	1597.2 2250.0 2777.8	51 47.5 41.5		1400	87		
566		B	5500 7800 9500	1527.8 2166.7 2638.9	47.5 44 38.5		1250	86		
567		C	5300 7500 9000	1472.2 2083.3 2500.0	44.5 41 37		1250	85		

FAS type pump performance

No.	Pump type		Capacity (m^3/h)	Capacity (L/s)	Head (m)	Speed (r/min)	Motor power (kw)	Eff. (%)	(NPSH)r (m)	Weight (kg)
568	800-880(I)		5152 7292 9392	1431 2026 2609	35.1 29.9 22.6	590	800	86	6	7300
569		A	4946 6998 9020	1374 1944 2505	32.7 27.6 21.0		710	84		
570		B	4700 6678 8567	1305 1855 2380	29.7 25.1 19.3		630	82		
571		C	4486 6372 8179	1246 1770 2272	27.1 23.1 17.6		560	78		
572		D	4259 6023 7775	1183 1673 2160	24.2 21.0 16.0		500	77		
573			6375 9022.5 10800	1770.8 2506 3000	52 45.8 37	730	1400	88	7.2	7300
574		A	6120 8658 10080	1700 2405 2800	49 42.2 36		1250	86		
575		B	5815 8262 9900	1615.3 2295 2750	44 38.5 30		1120	84		
576		C	5550 7884 9360	1541.7 2190 2600	40 35.4 28		1000	80		
577		D	5270 7452 8892	1463.9 2070 2470	36 32.2 26.5		900	80		
578	800-880S		4768 5738 6789	1325 1594 1886	35.9 34.0 31.0	590	800	85	5	7300
579		A	4284 5334 6385	1190 1482 1774	35.3 33.3 29.4		710	83		
580		B	4203 5213 6223	1167 1448 1729	33.3 31.4 28.1		630	81		
581			5900 7100 8400	1639 1972 2333	55 52 47.5	730	1400	87	6	7300
582		A	5300 6600 7900	1472 1833 2194	54 51 45		1250	85		
583		B	5200 6450 7700	1444 1792 2139	51 48 43		1120	83		
584	800-880		3871 6025 7921	1075 1674 2200	33.6 28.1 20.4	590	630	85	5.3	7300
585		A	3718 5772 7476	1033 1603 2077	30.6 25.3 18.3		560	83		
586		B	3556 5470 7137	988 1519 1982	27.7 22.6 15.5		500	79		
587		C	3378 5192 6716	938 1442 1866	24.7 20.0 13.1		400	77		
588		D	3209 4874 6357	891 1354 1766	21.4 17.5 10.9		355	75		
589			5184 7455 9000	1440 2071 2500	48.5 43 38	730	1120	87	6	7300

FLUGO reserves the right to change the technical data and dimensions in order to update or improve its product without prior notice.

FAS type pump performance

No.	Pump type		Capacity (m^3/h)	Capacity (L/s)	Head (m)	Speed (r/min)	Motor power (kw)	Eff. (%)	(NPSH)r (m)	Weight (kg)
590	800-880	A	4896 7142 8640	1360 1984 2400	43.5 38.8 34	730	1000	85	6	7300
591		B	4752 6768 8100	1320 1880 2250	38.5 34.6 31		900	83		
592		C	4500 6426 7740	1250 1785 2150	34 30.6 26		710	81		
593		D	4212 6030 7272	1170 1675 2020	30 26.8 22		630	79		
594	800-980(I)		5334 7929 9424	1482 2202 2618	48.2 40.8 33.4	590	1120	87	6	8500
595		A	5120 7516 8963	1422 2088 2490	43.1 36.1 29.6		1000	85		
596		B	4914 7187 8405	1365 1996 2335	38.9 32.3 26.9		900	83		
597		C	4663 6890 7828	1295 1914 2174	35.1 28.9 25.3		800	81		
598			6840 9810 11660	1900 2725 3239	73.8 62.5 54	730	2000	89	7.5	8500
599		A	6552 9300 11090	1820 2583.3 3080.6	64 55.3 47		1800	87		
600		B	6228 8892 10400	1730 2470 2889	57 49.4 41.2		1600	85		
601		C	5976 8525 9685	1660 2368 2690	51 44.3 38.8		1400	83		
602	800-980		4284 6479 8769	1190 1800 2436	40.4 34.1 23.5	590	800	87	5	8500
603		A	4142 6197 8292	1151 1722 2303	37.1 31.2 21.9		710	85		
604		B	3976 5848 7710	1105 1625 2142	33.7 31.5 19.9		710	83		
605		C	3815 5528 7128	1060 1536 1980	30.3 25.5 18.3		560	81		
606		D	3661 5179 6674	1017 1439 1854	26.9 22.9 16.3		450	79		
607			5616 8017 9648	1560 2227 2680	61.8 52.2 44	730	1400	89	6.3	8500
608		A	5400 7668 9216	1500 2130 2560	56.8 47.7 40		1250	87		
609		B	5076 7236 8712	1410 2010 2420	51.6 43.5 36		1250	85		
610		C	4720 6840 8280	1311 1900 2300	46.4 39 32		1000	83		
611		D	4530 6408 7740	1358.3 1780 2150	41.2 35 29		800	81		

FAS type pump performance curve chart

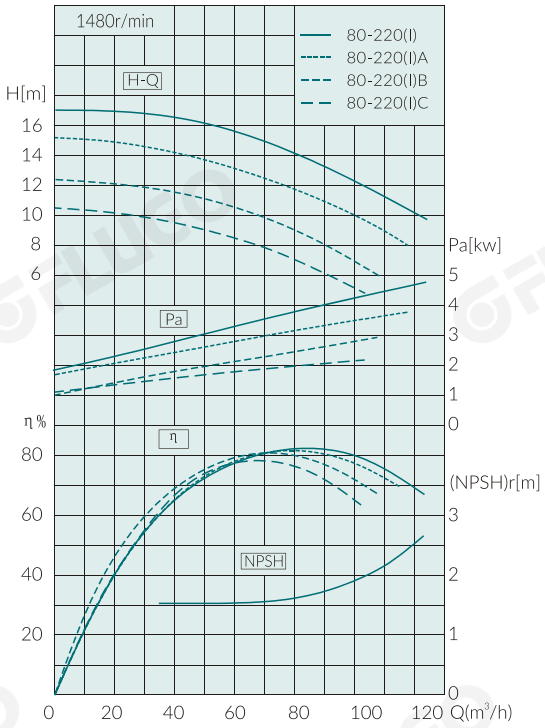

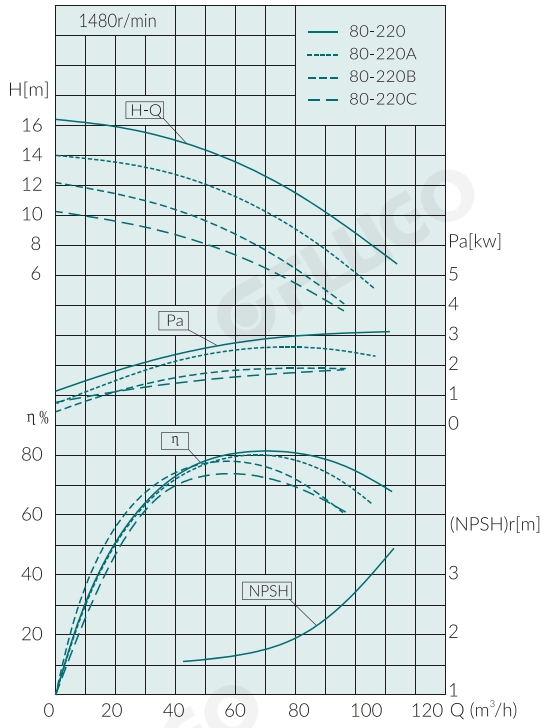

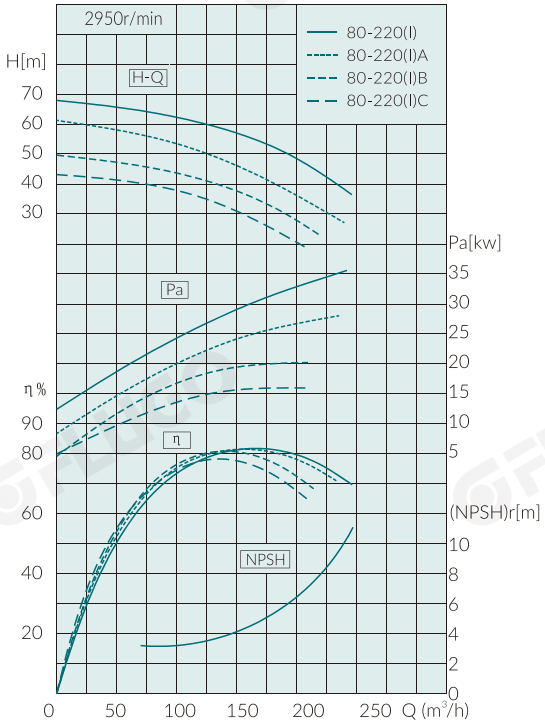

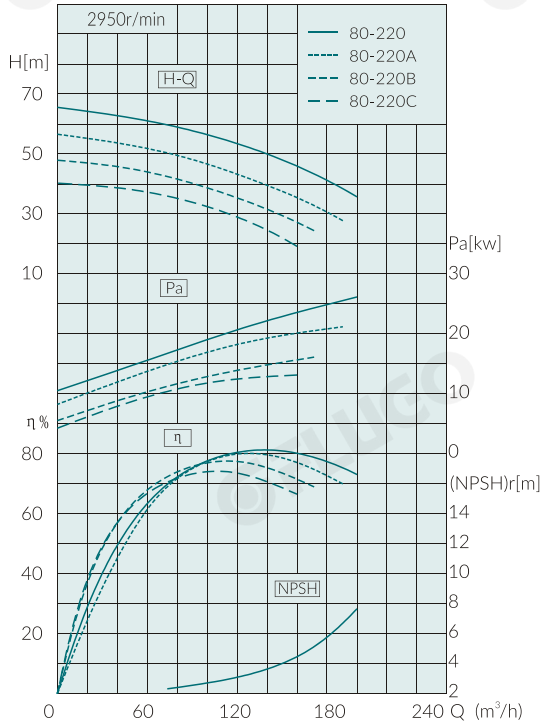

FLUGO reserves the right to change the technical data and dimensions in order to update or improve its product without prior notice.

FAS type pump performance

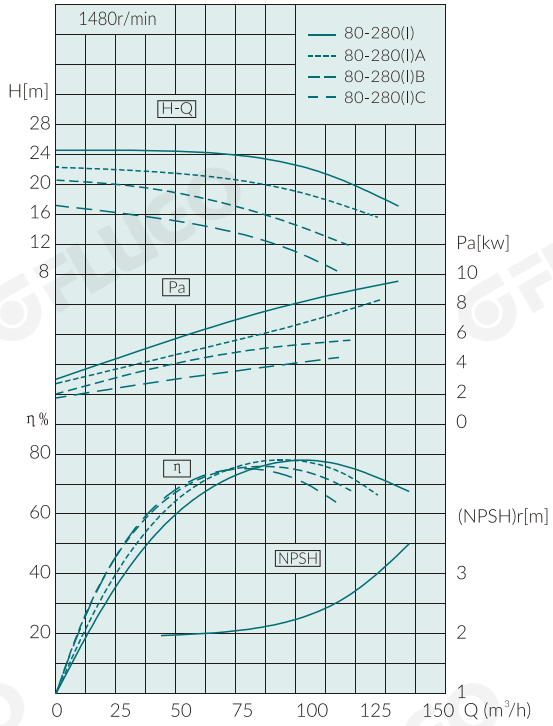

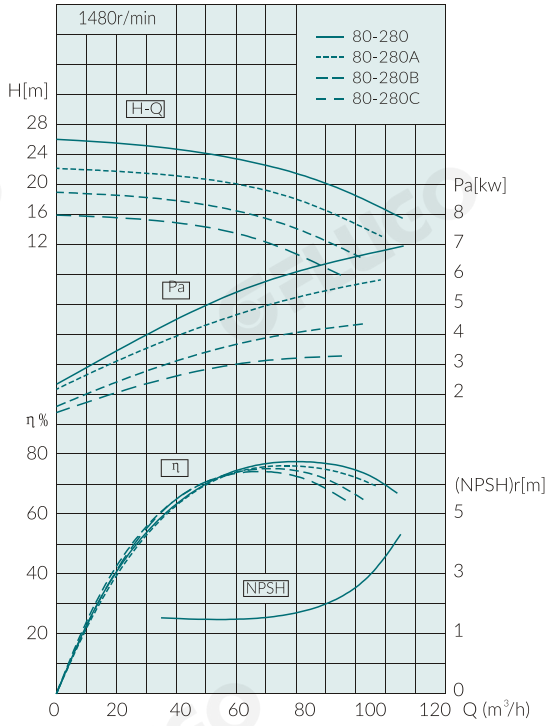

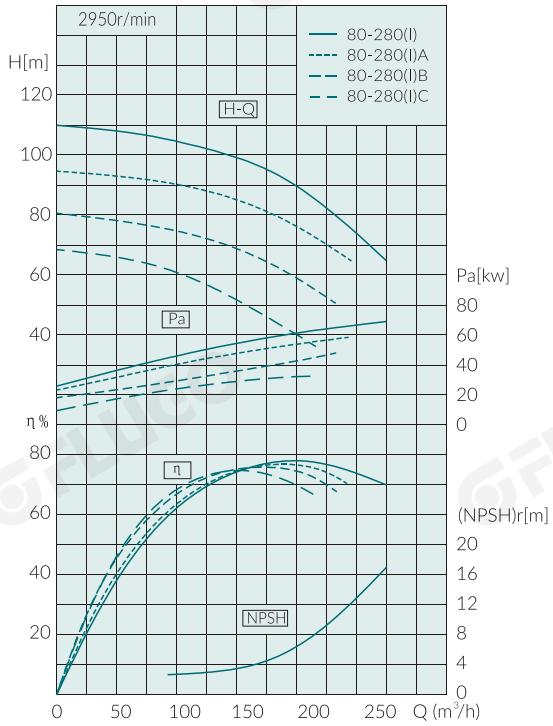

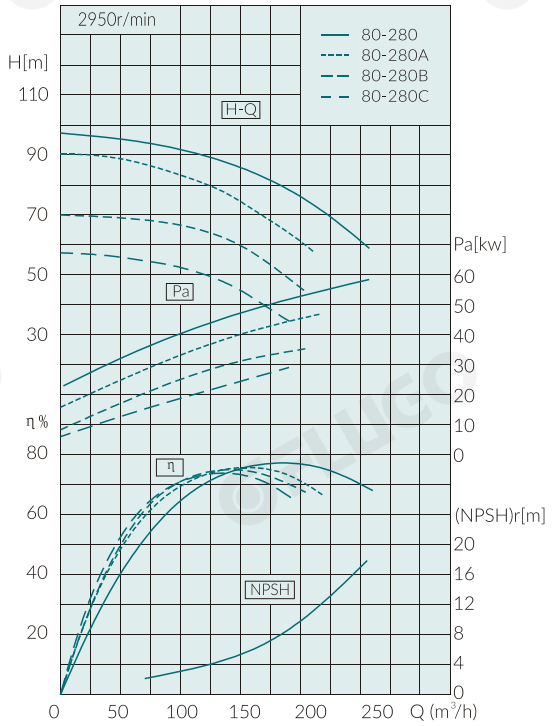

FAS type pump performance

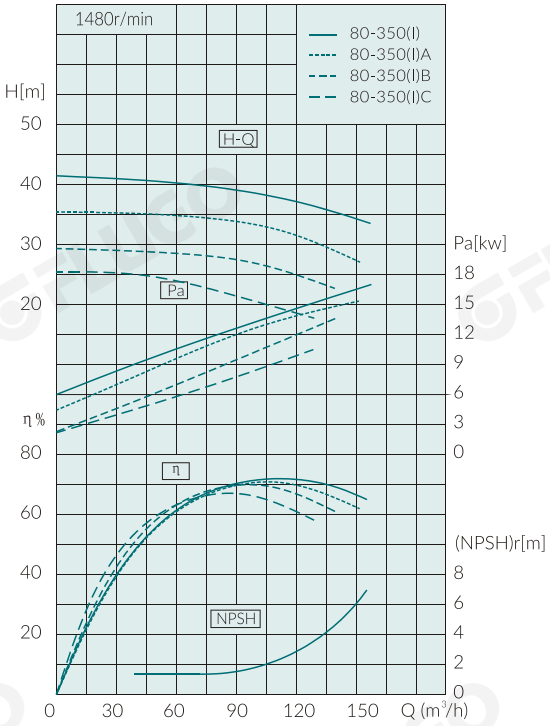

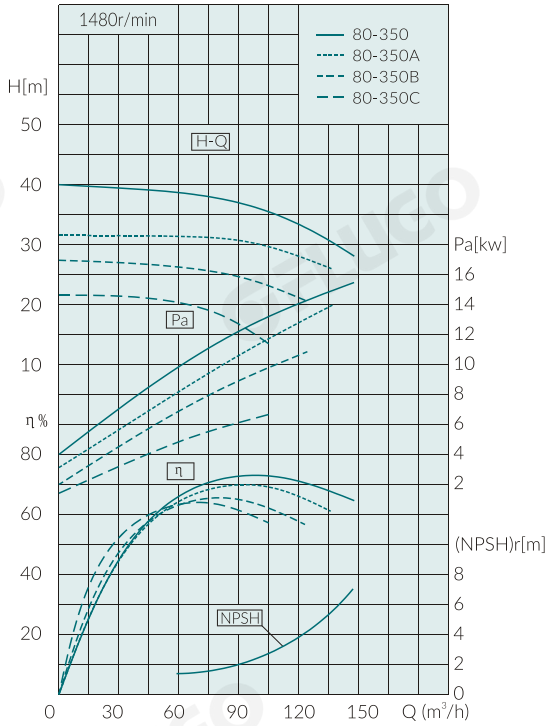

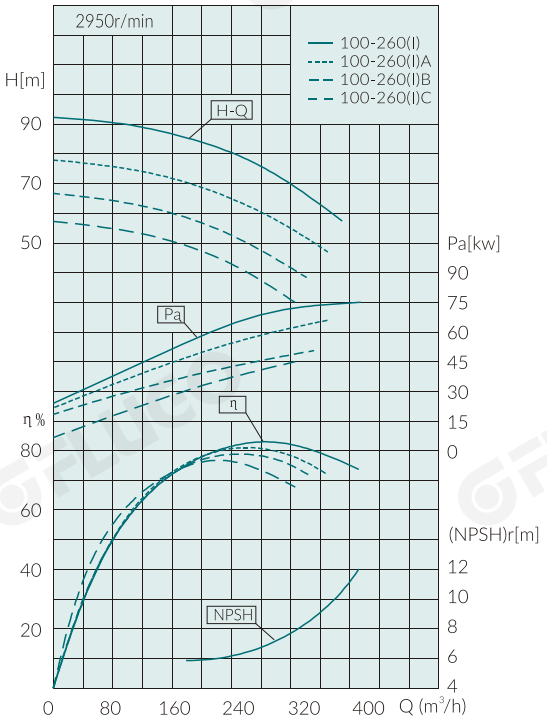

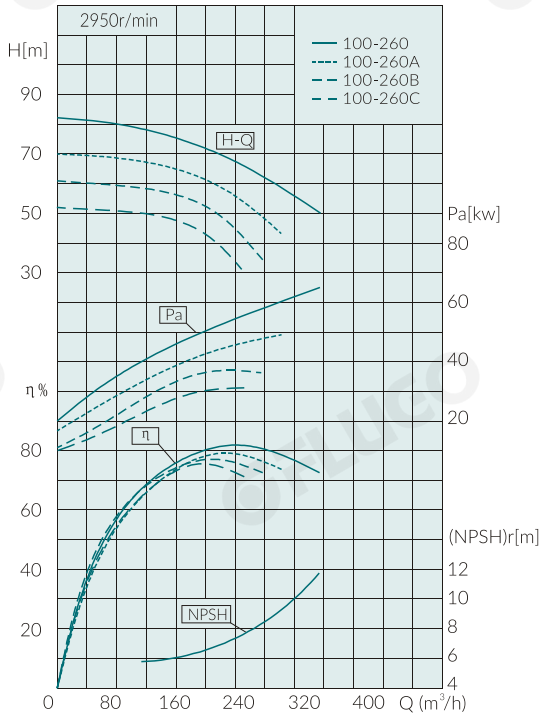

FLUGO reserves the right to change the technical data and dimensions in order to update or improve its product without prior notice.

FAS type pump performance

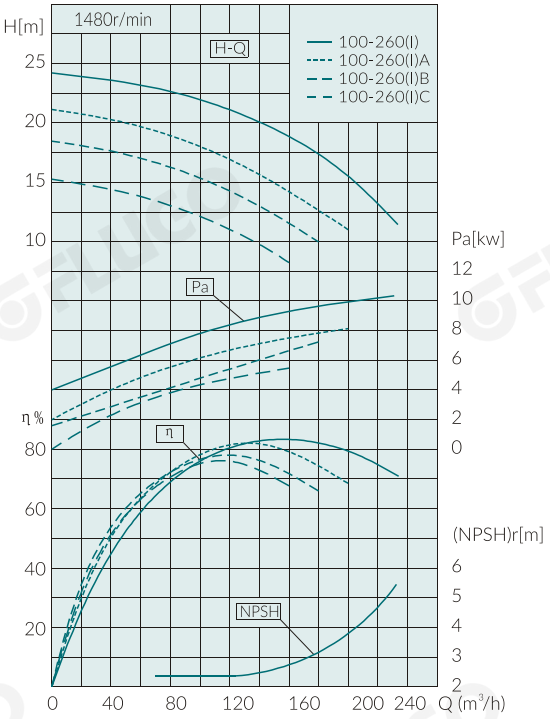

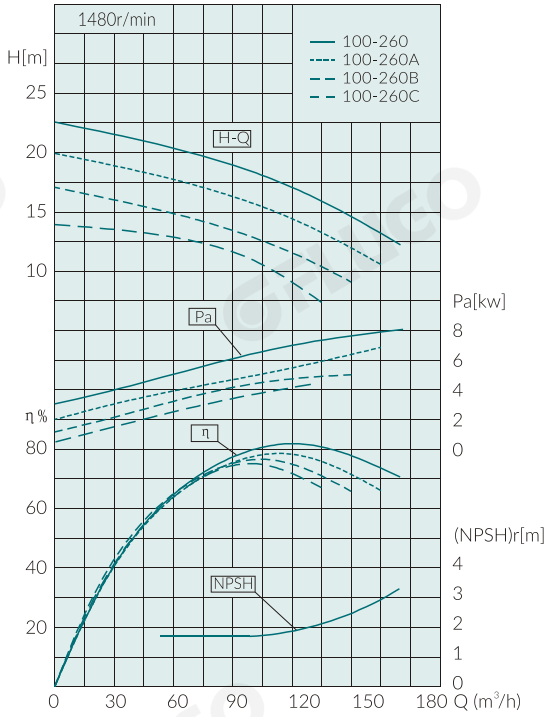

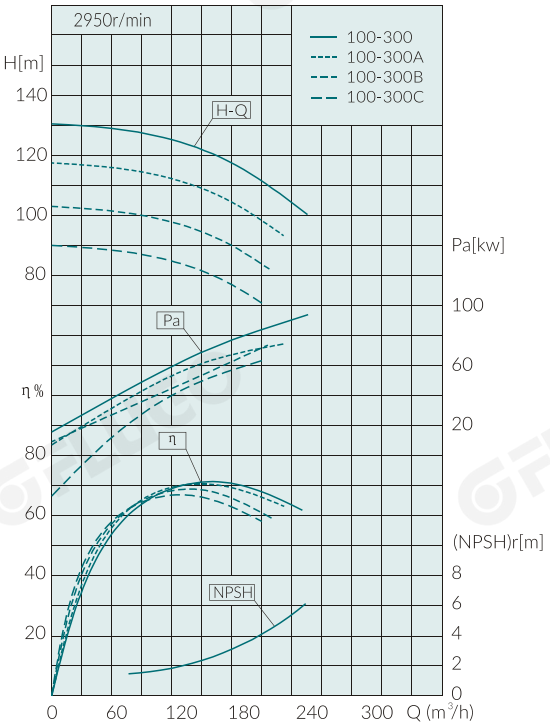

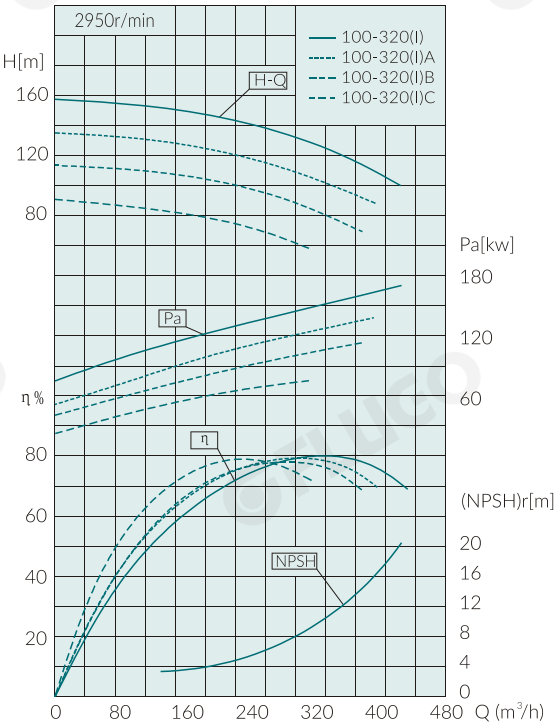

FAS type pump performance curve chart

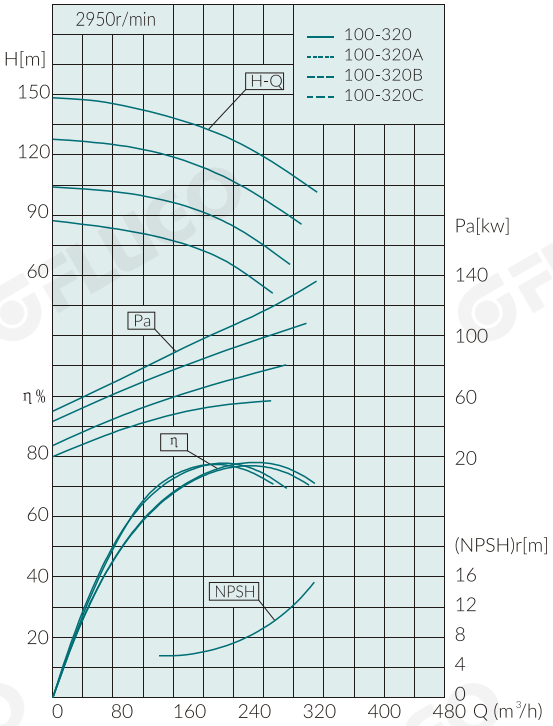

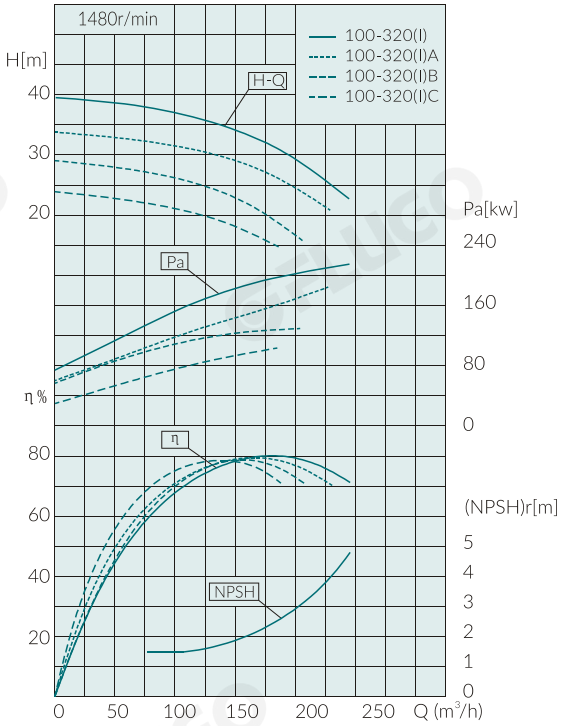

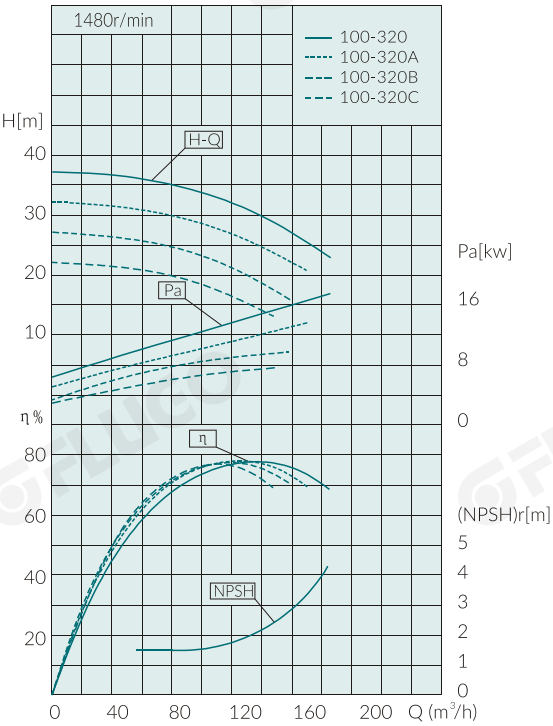

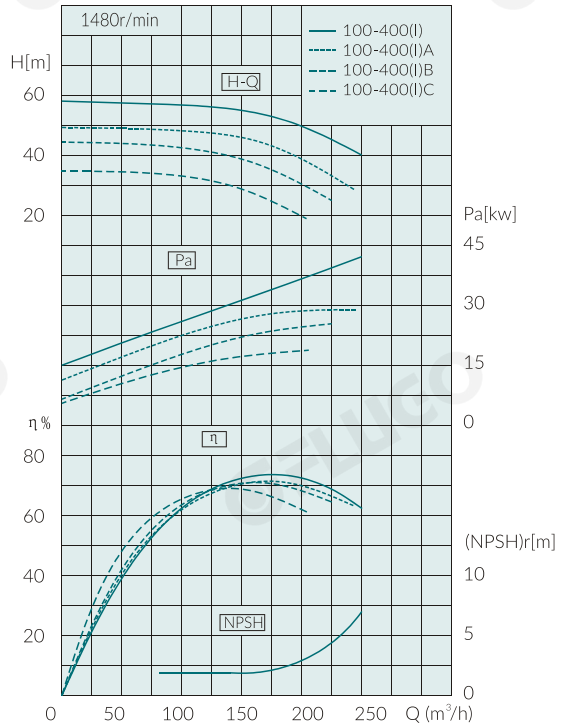

FLUGO reserves the right to change the technical data and dimensions in order to update or improve its product without prior notice.

FAS type pump performance

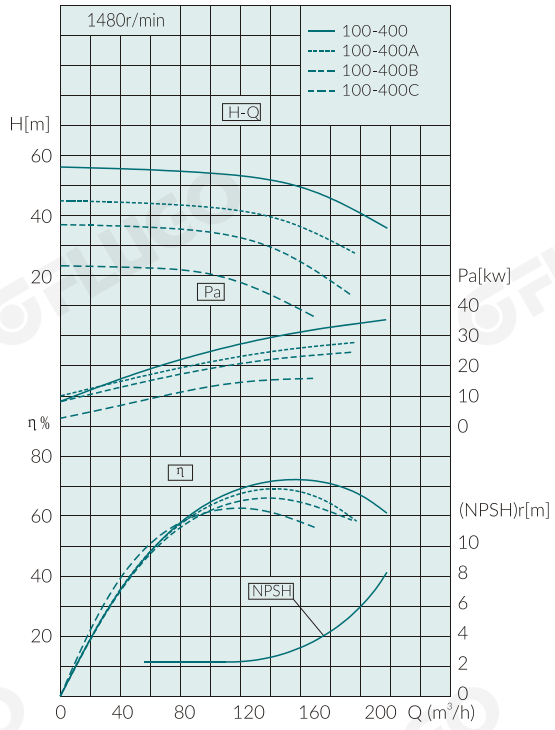

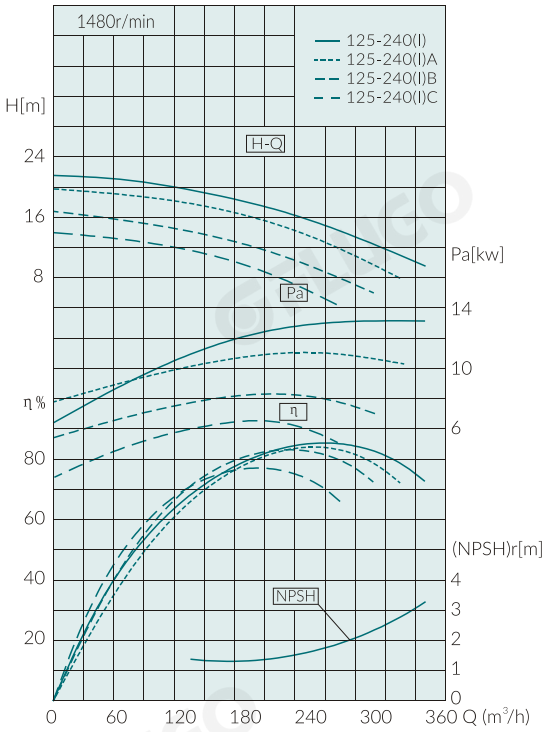

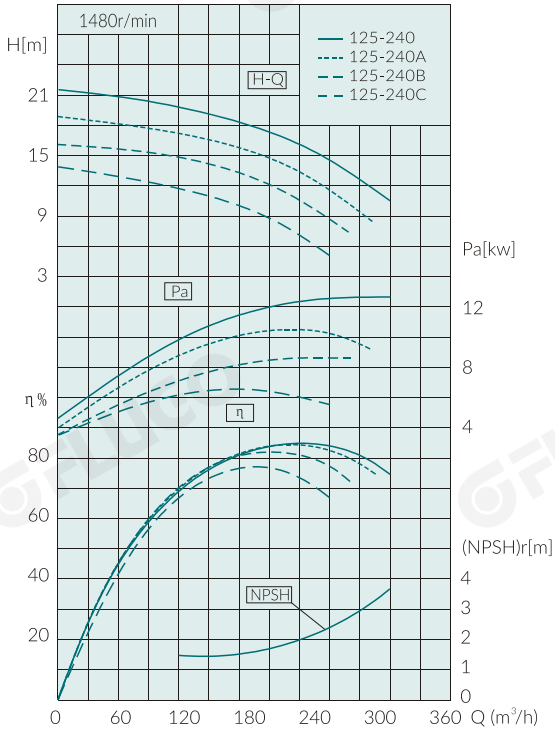

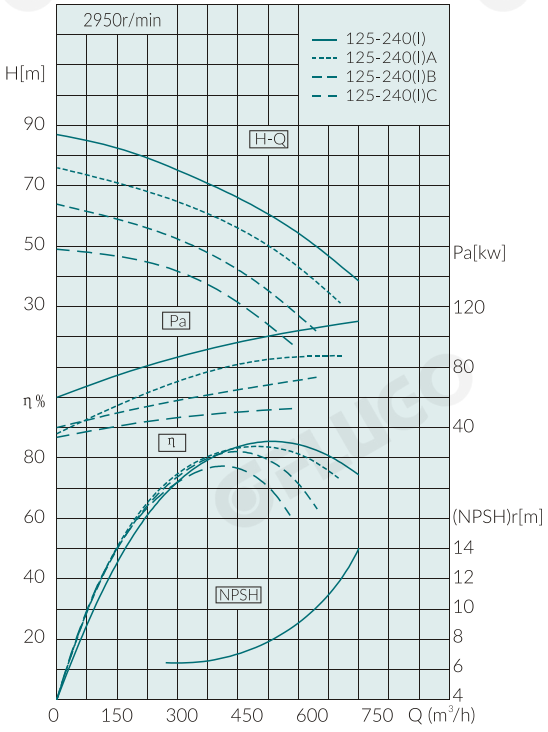

FAS type pump performance

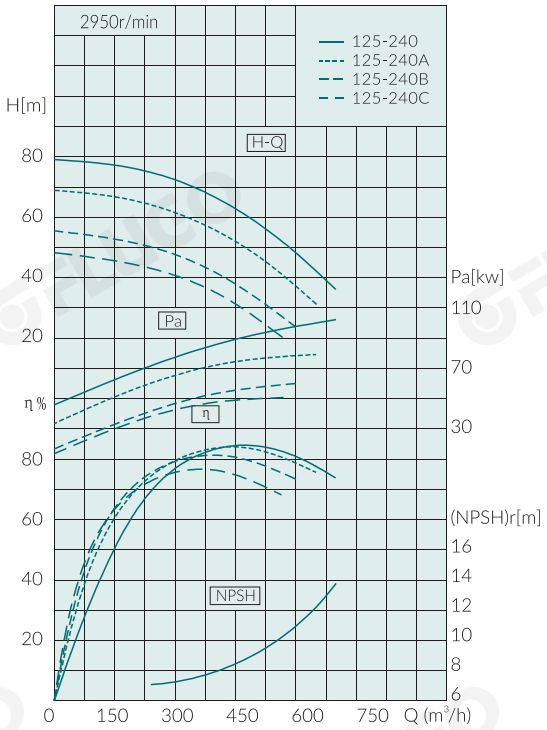

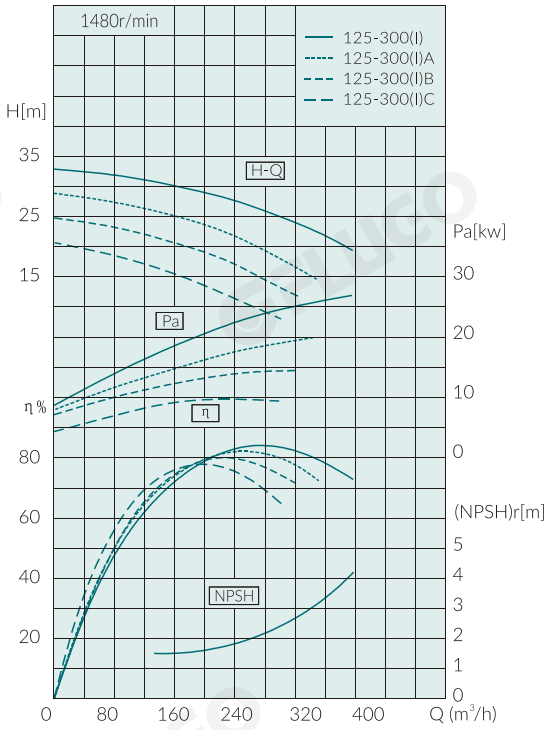

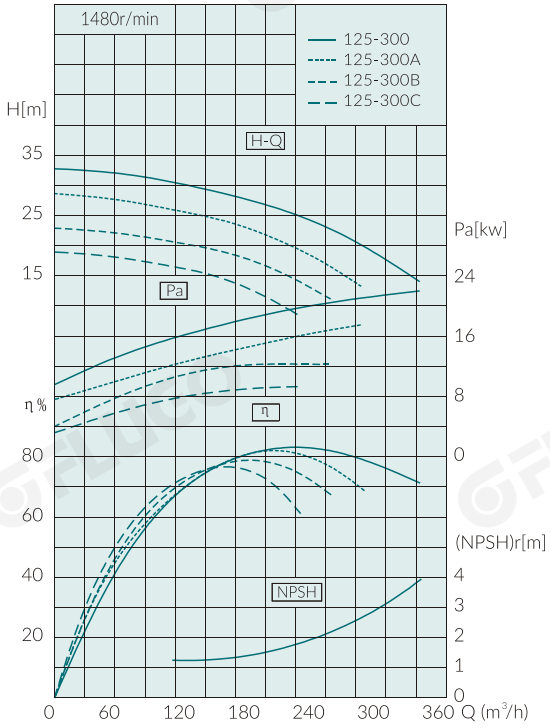

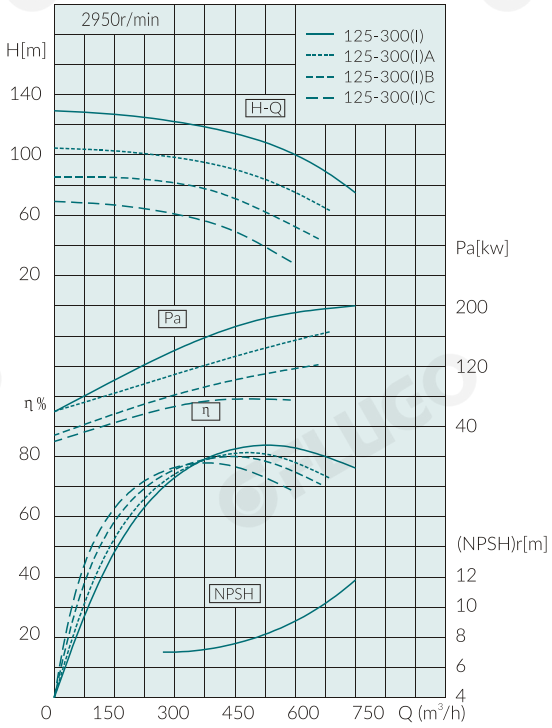

FLUGO reserves the right to change the technical data and dimensions in order to update or improve its product without prior notice.

FAS type pump performance

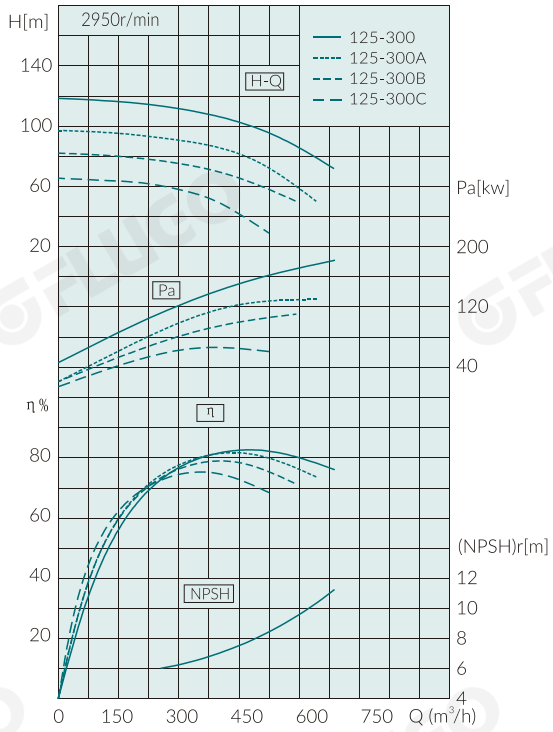

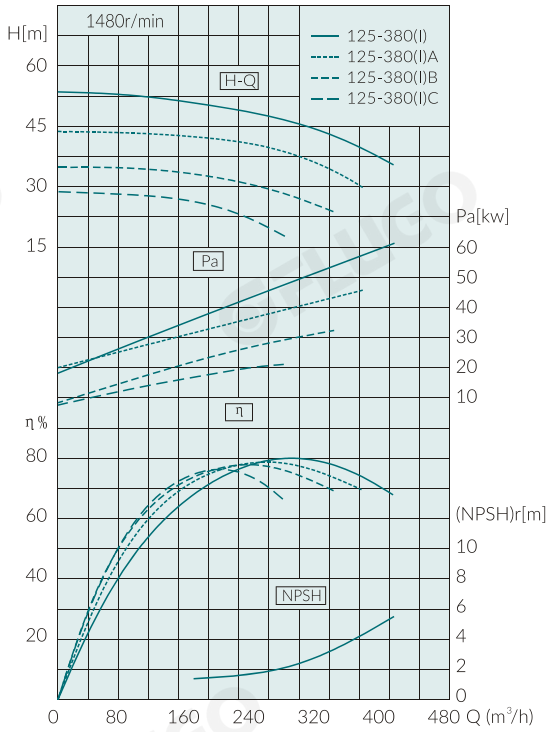

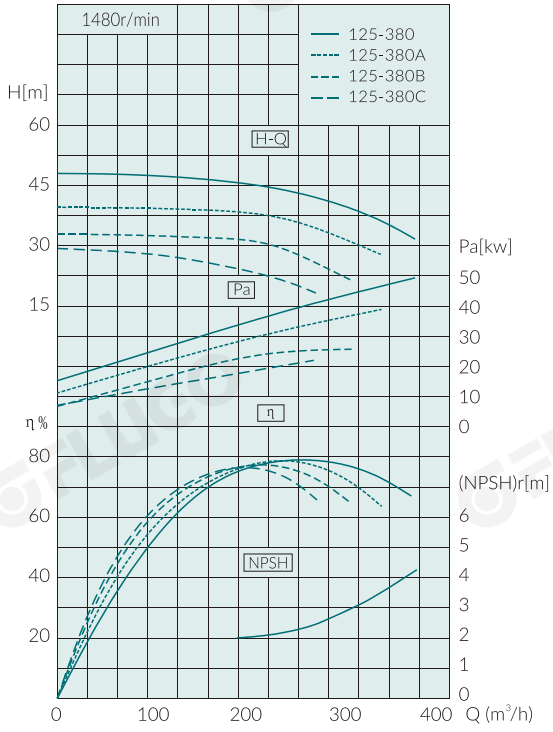

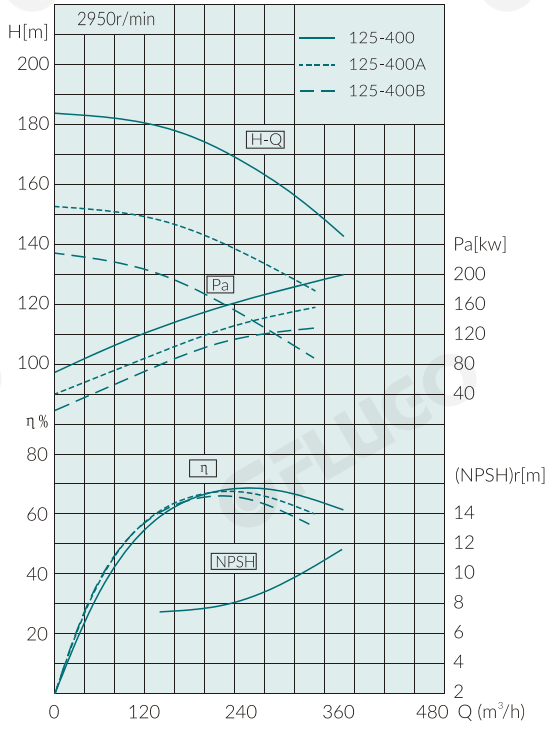

FAS type pump performance curve chart

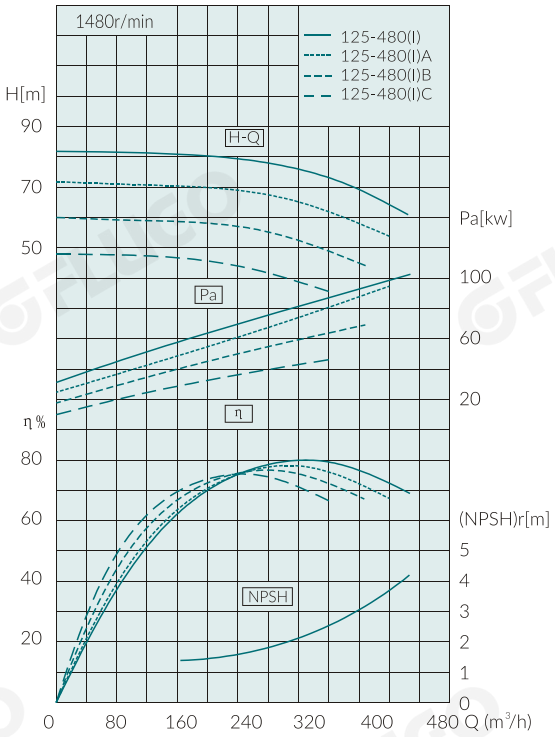

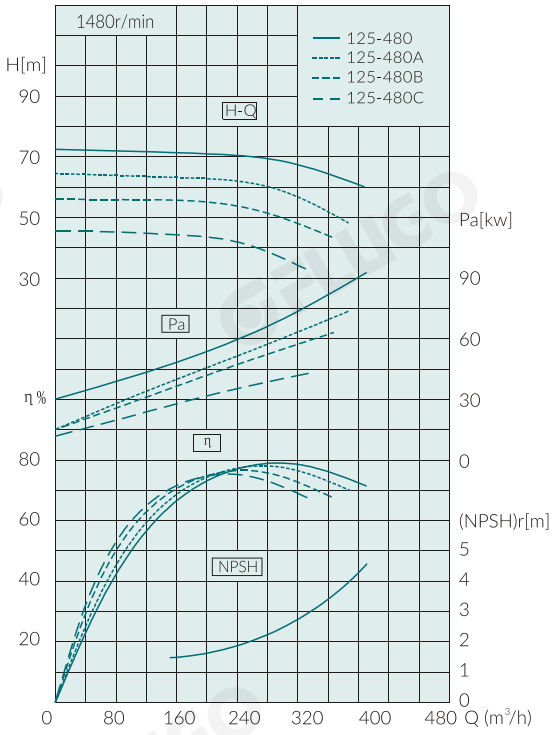

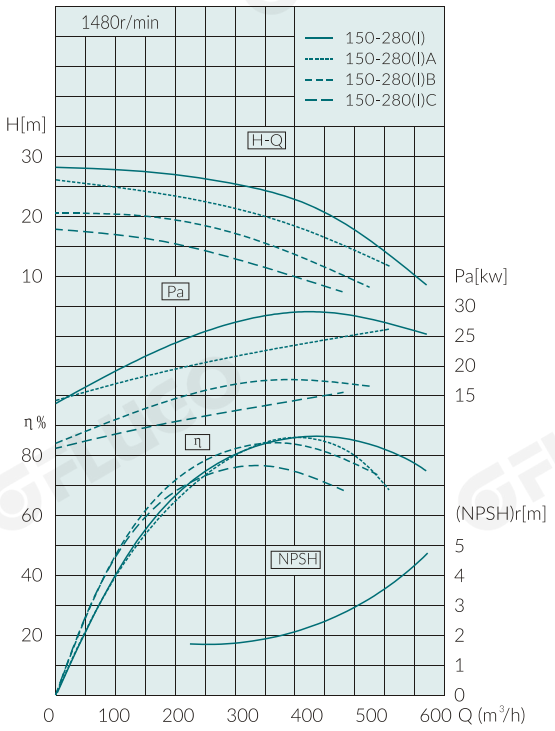

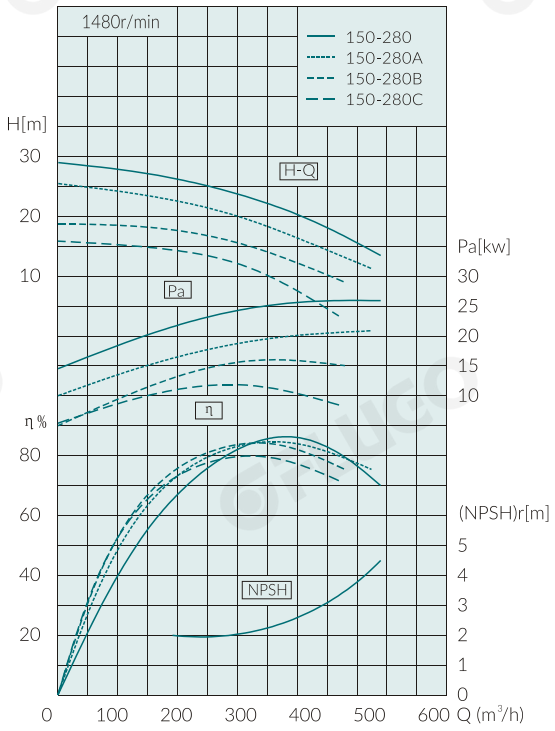

FLUGO reserves the right to change the technical data and dimensions in order to update or improve its product without prior notice.

FAS type pump performance

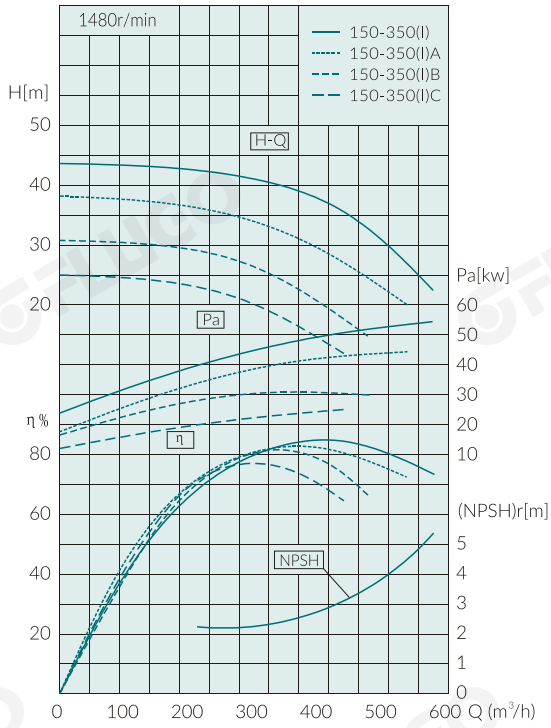

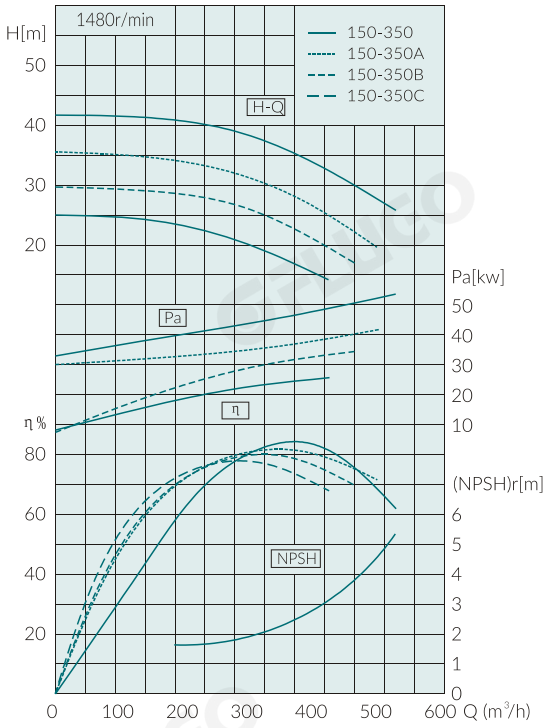

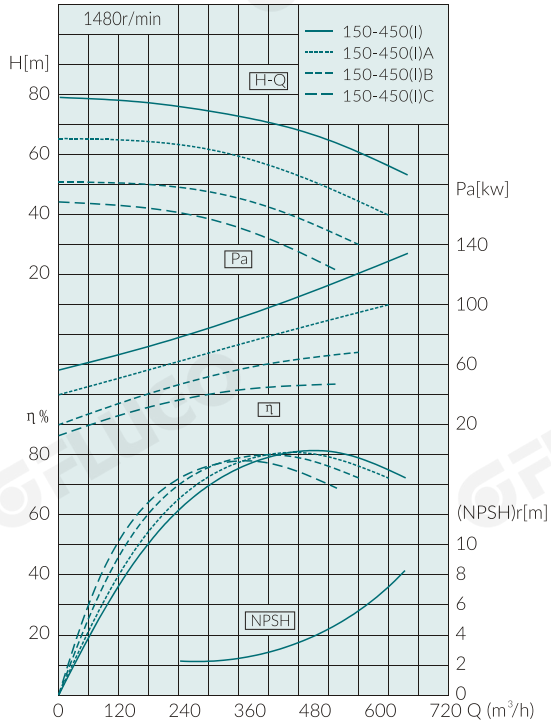

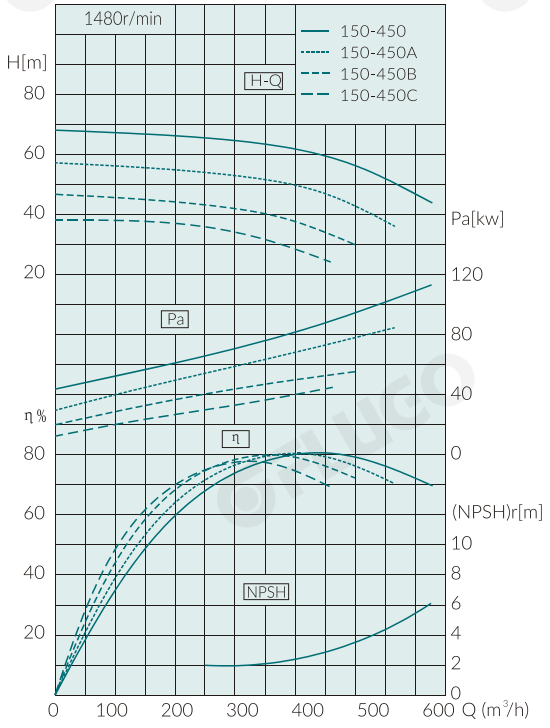

FAS type pump performance

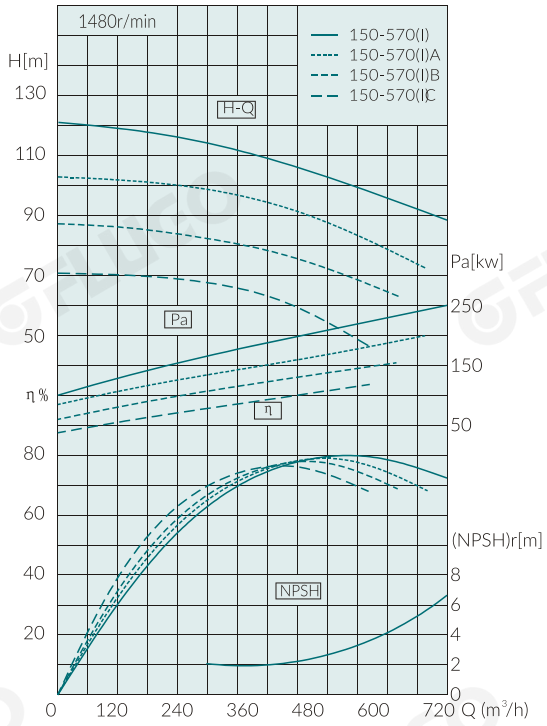

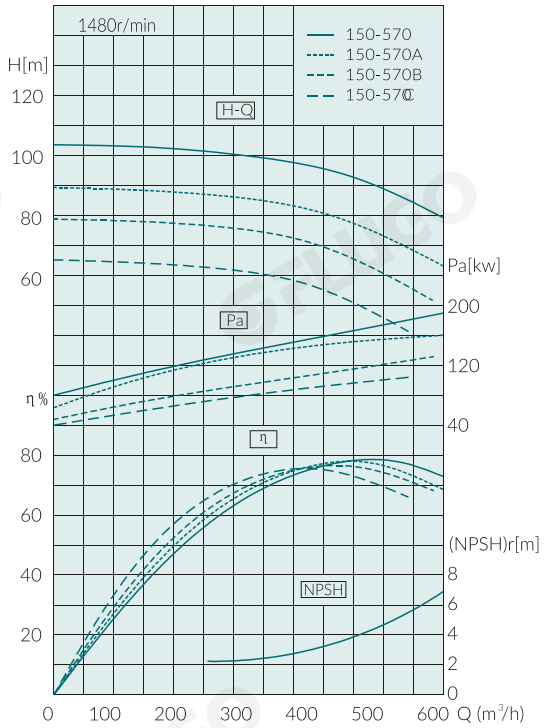

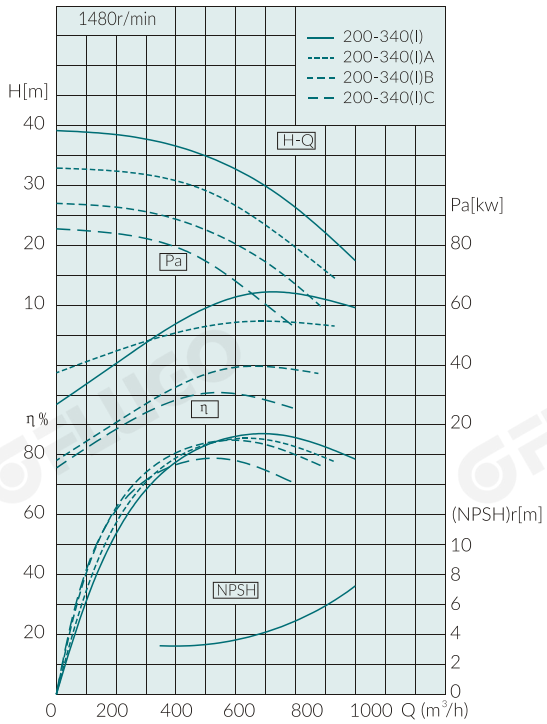

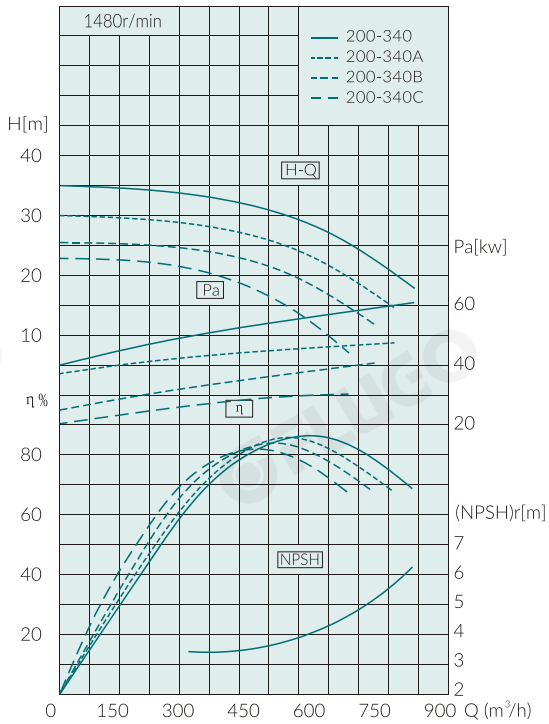

FLUGO reserves the right to change the technical data and dimensions in order to update or improve its product without prior notice.

FAS type pump performance

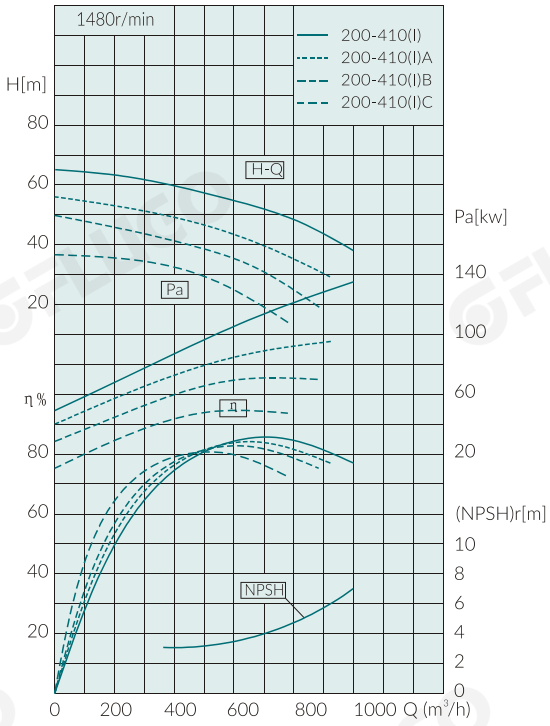

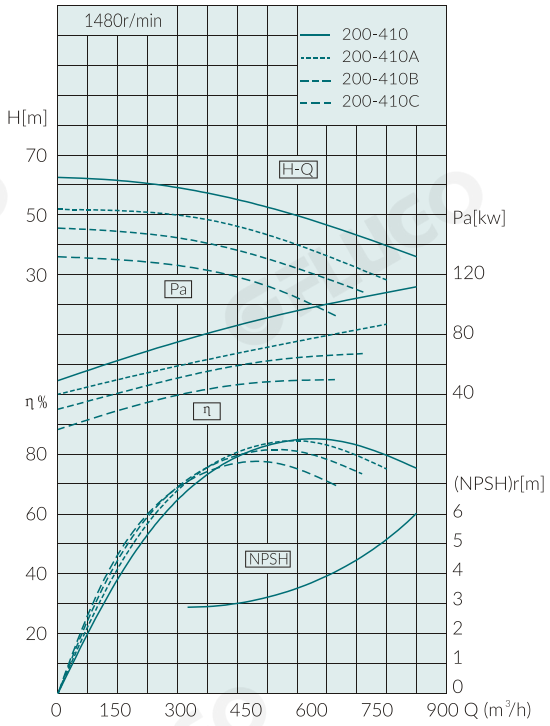

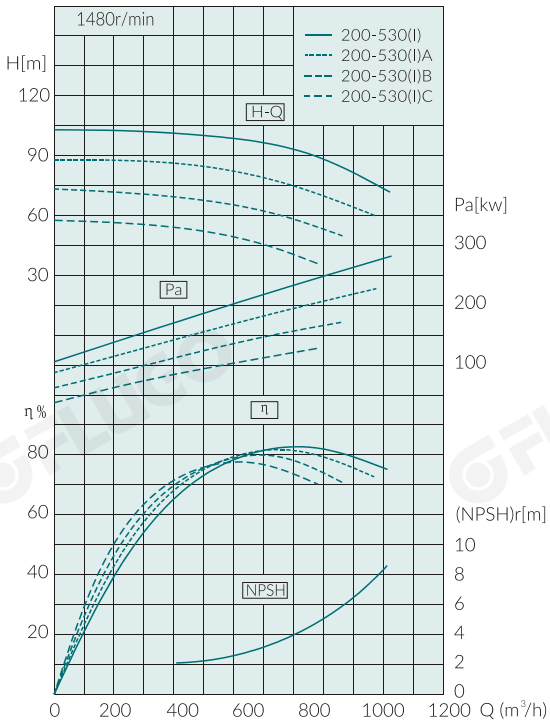

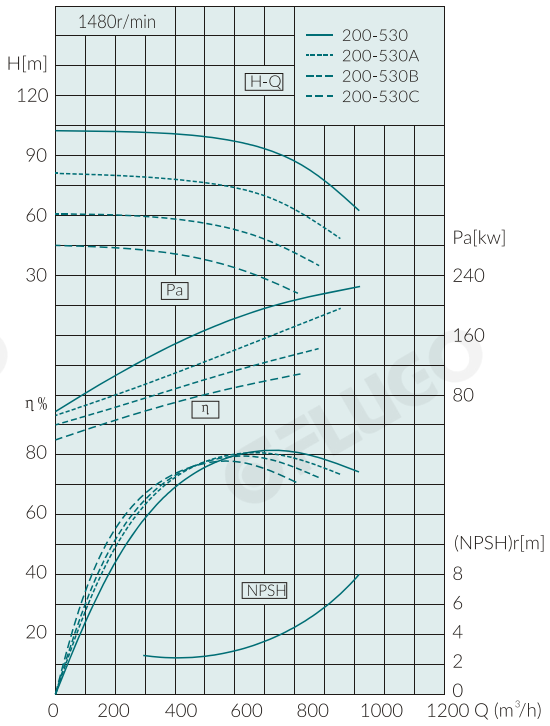

FAS type pump performance curve chart

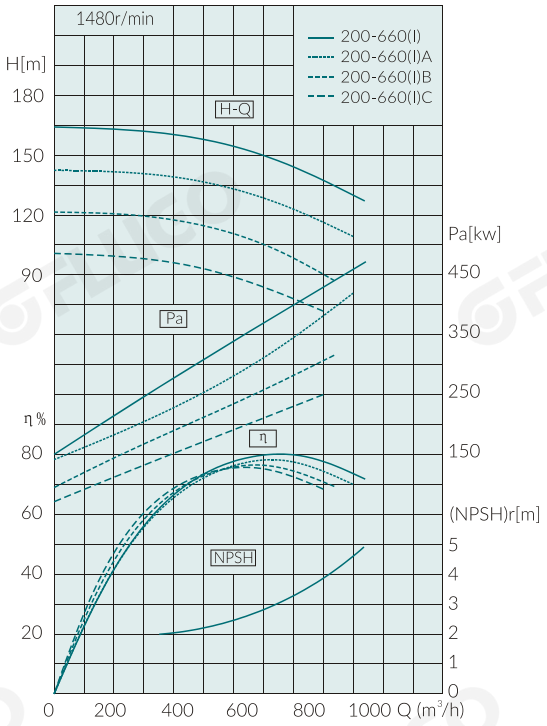

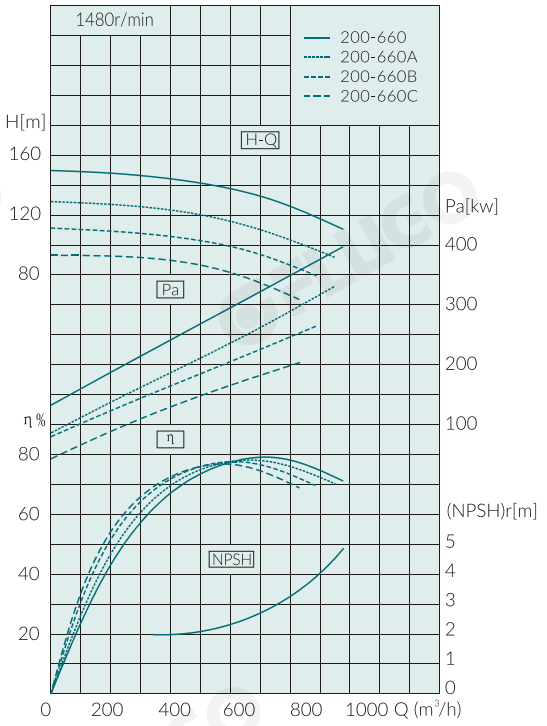

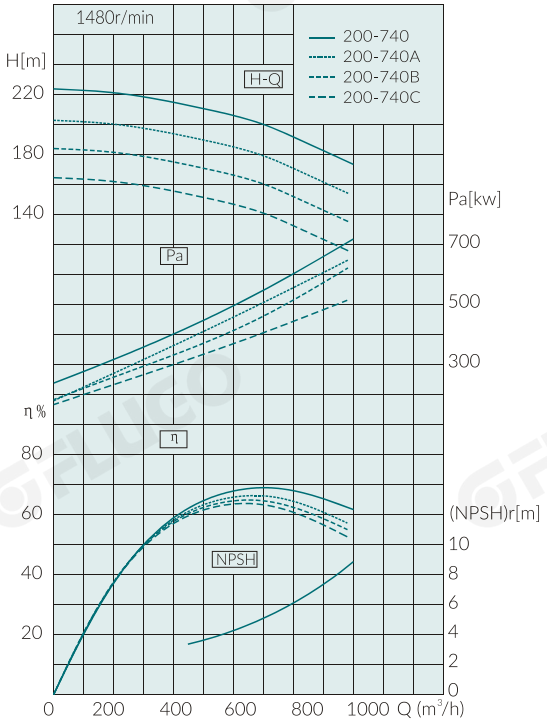

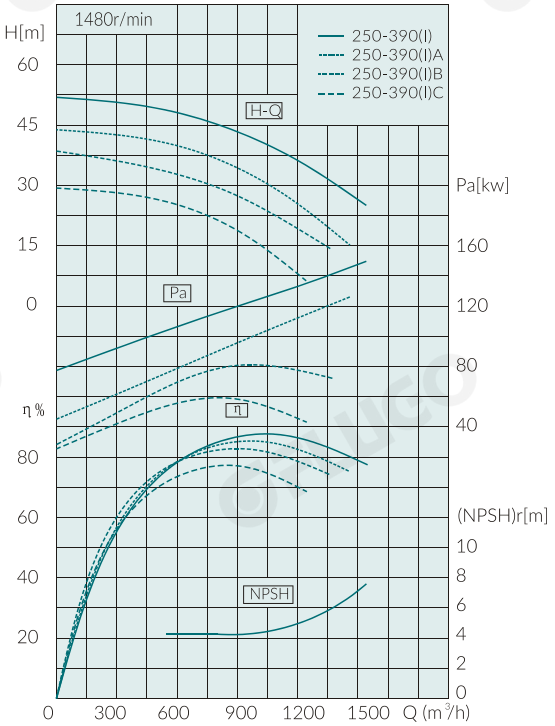

FLUGO reserves the right to change the technical data and dimensions in order to update or improve its product without prior notice.

FAS type pump performance

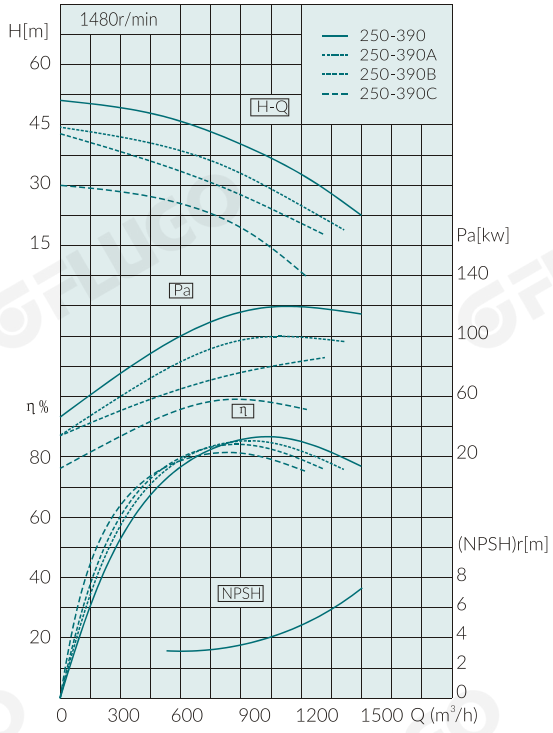

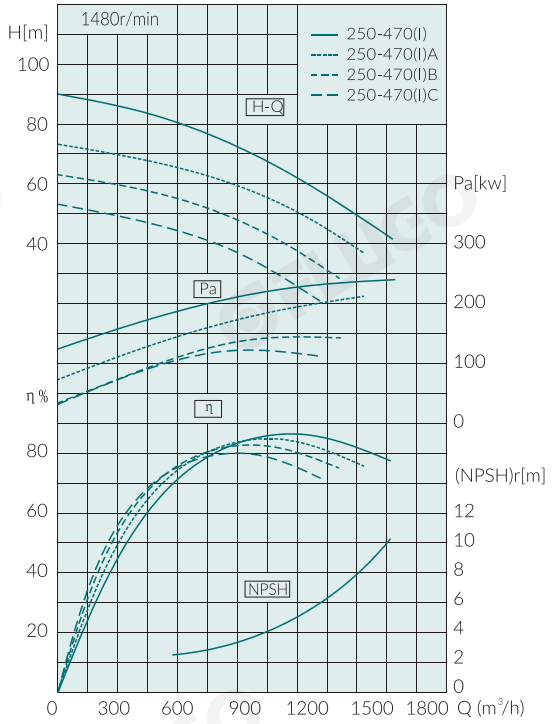

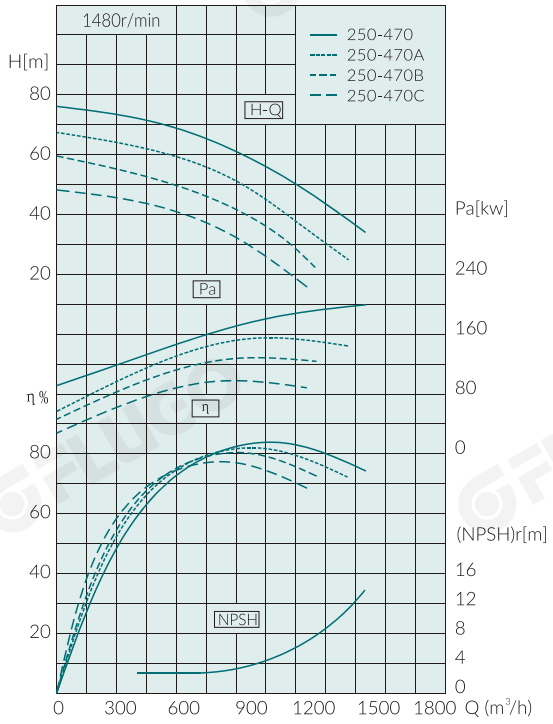

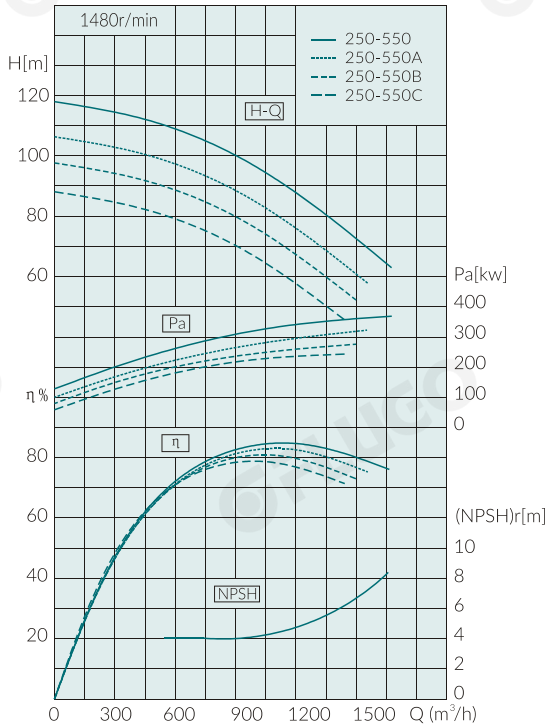

FAS type pump performance

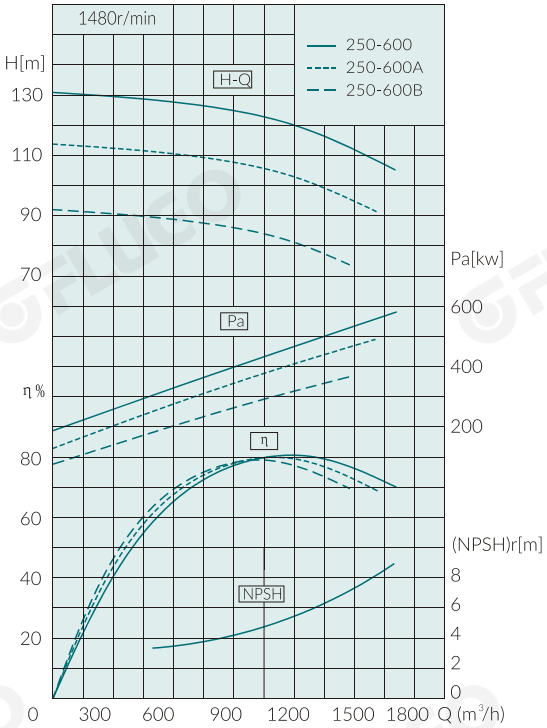

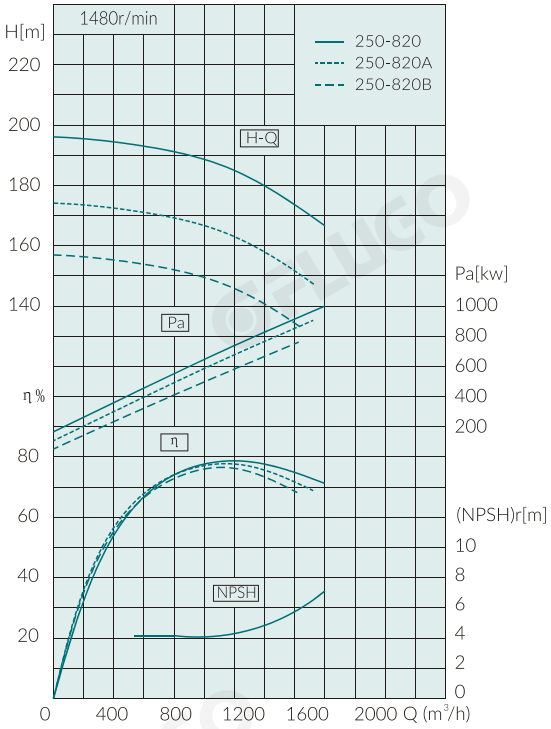

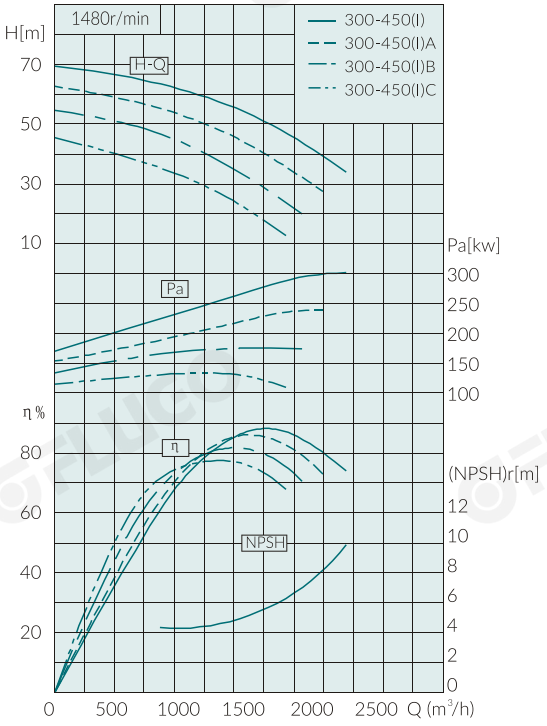

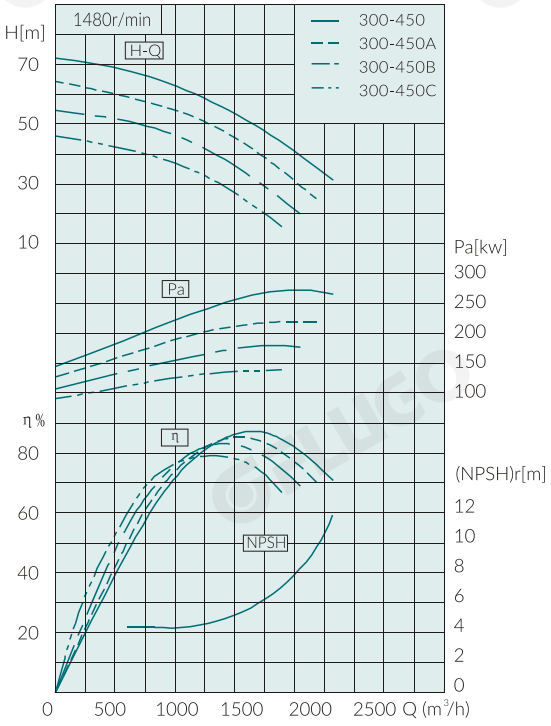

FLUGO reserves the right to change the technical data and dimensions in order to update or improve its product without prior notice.

FAS type pump performance

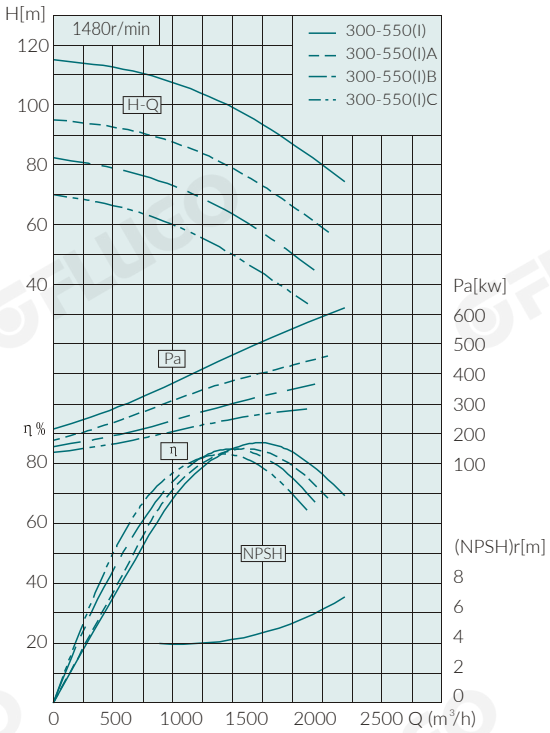

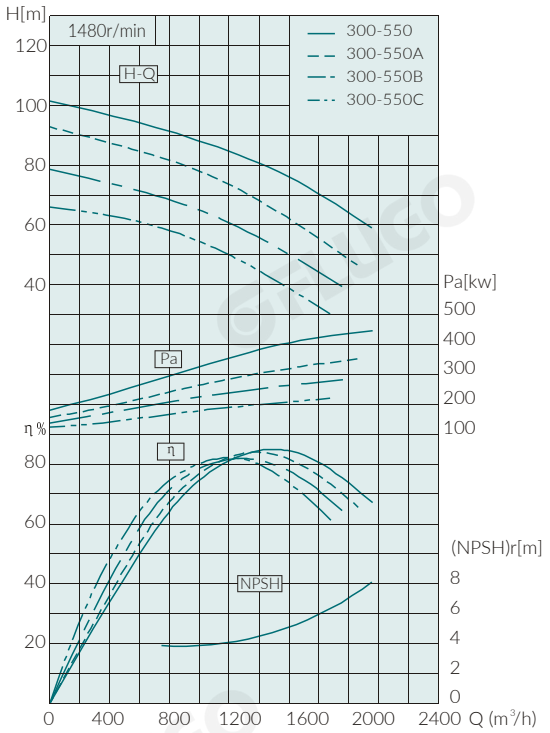

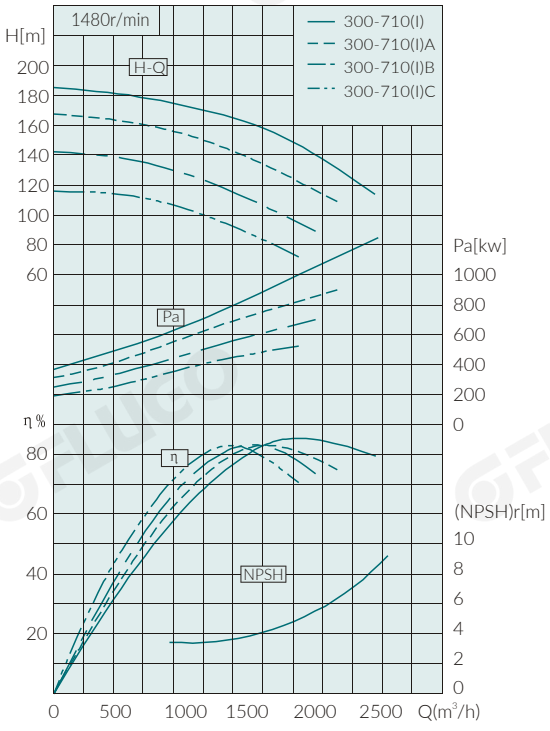

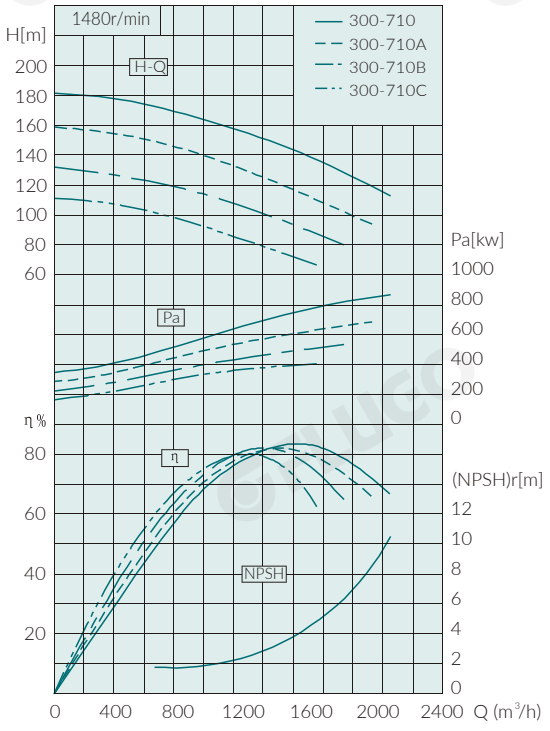

FAS type pump performance curve chart

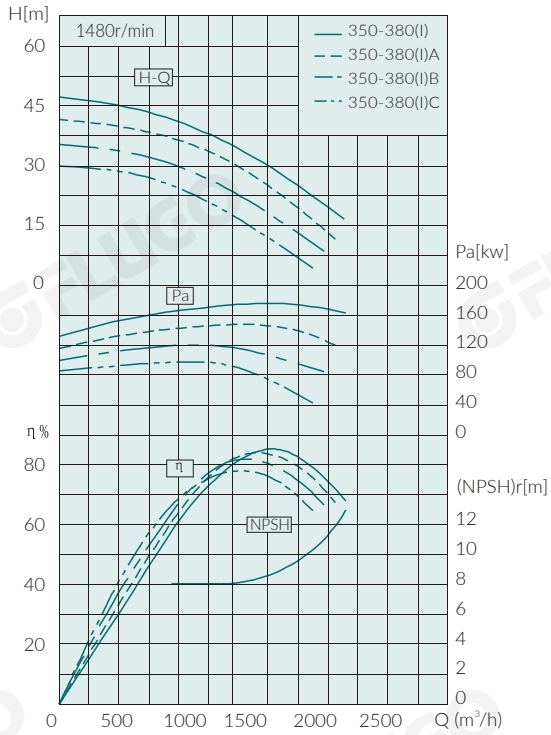

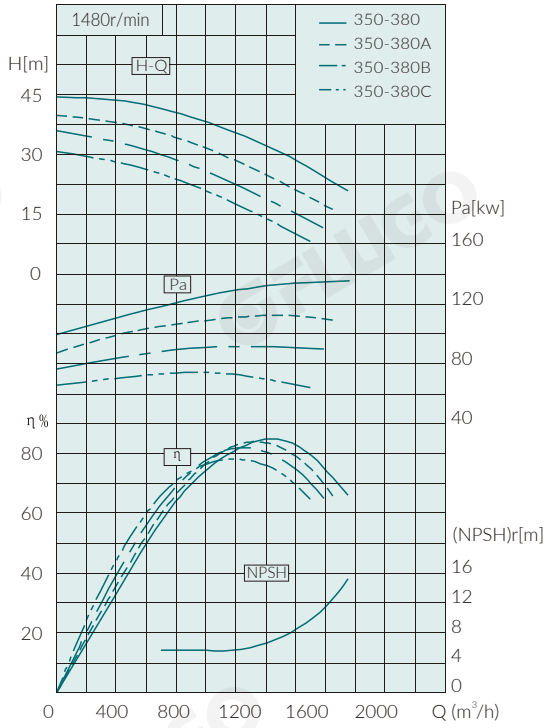

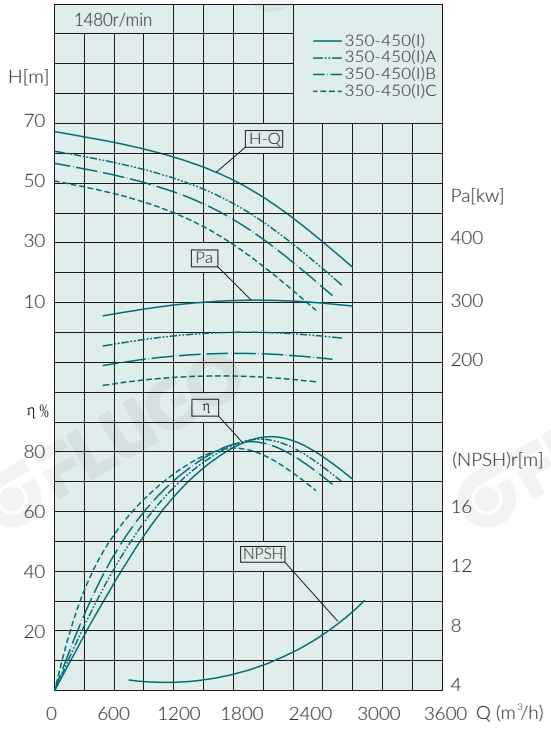

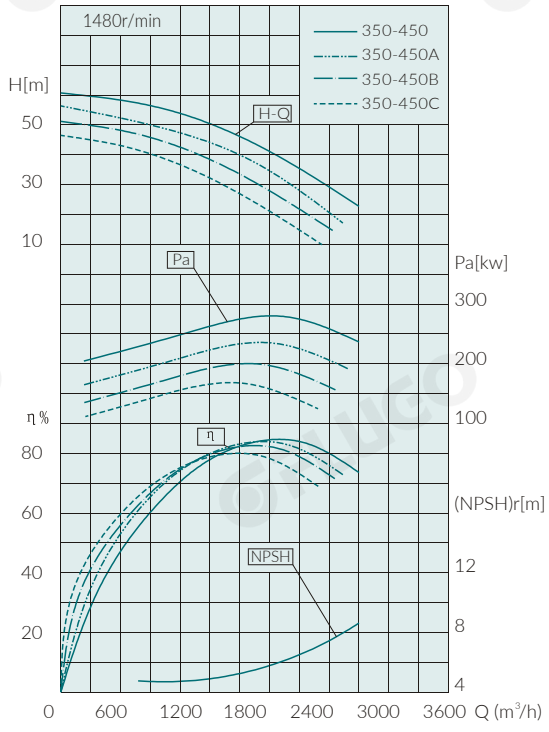

FLUGO reserves the right to change the technical data and dimensions in order to update or improve its product without prior notice.

FAS type pump performance

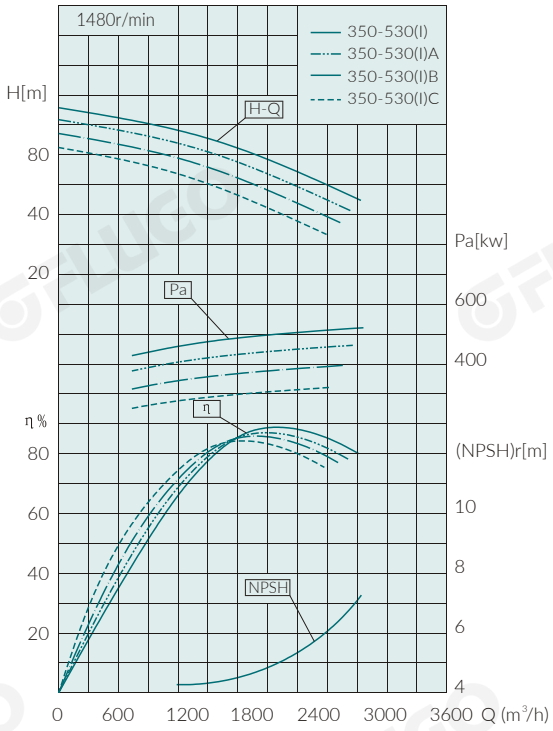

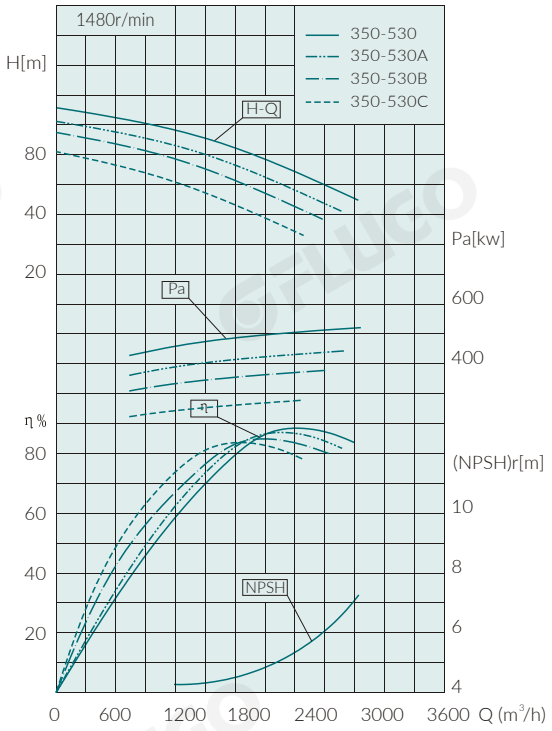

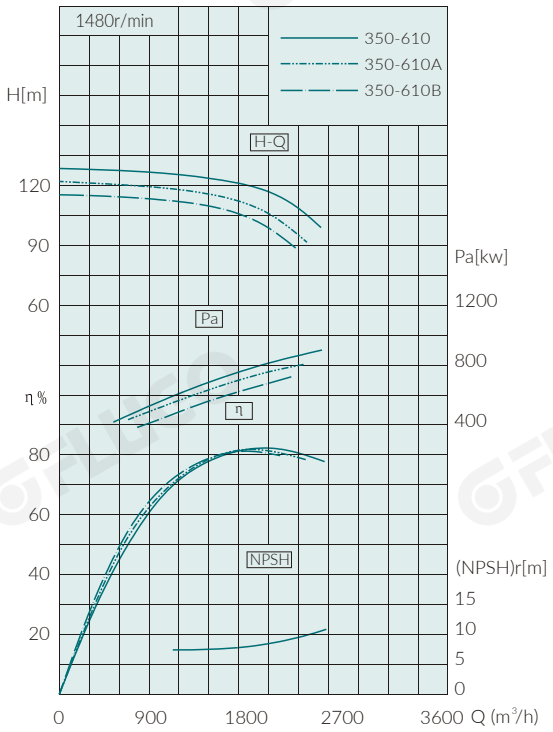

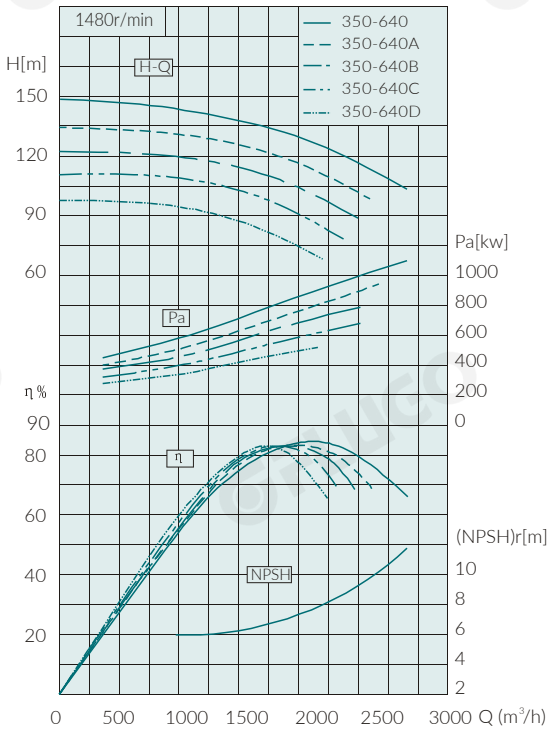

FAS type pump performance

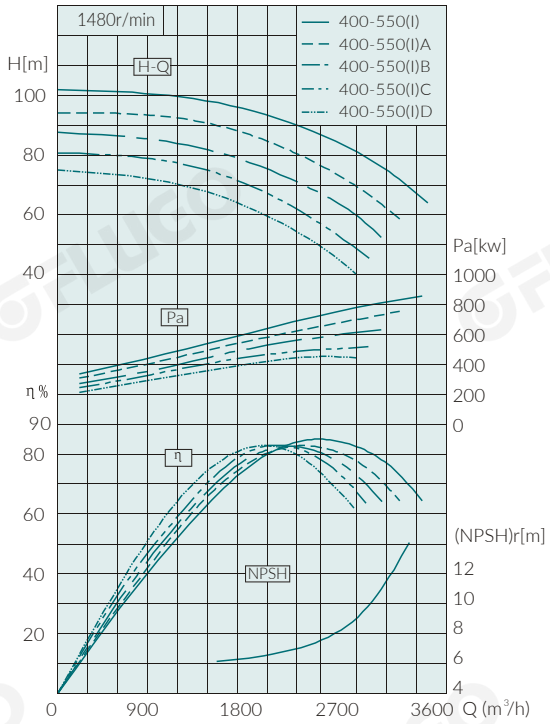

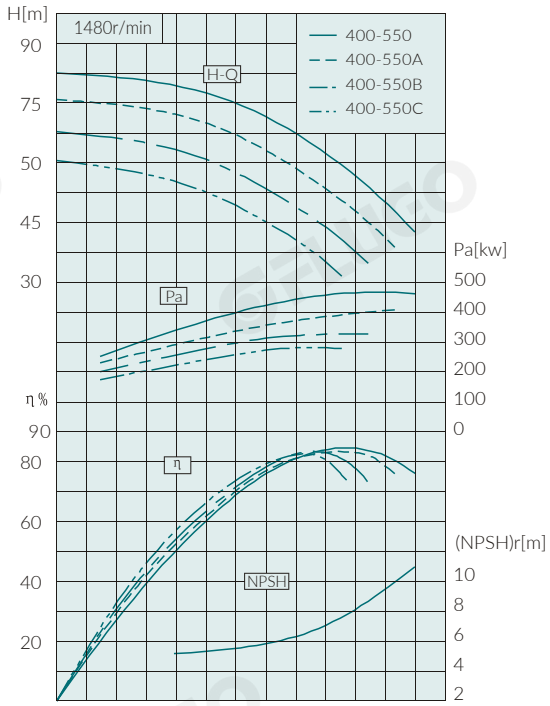

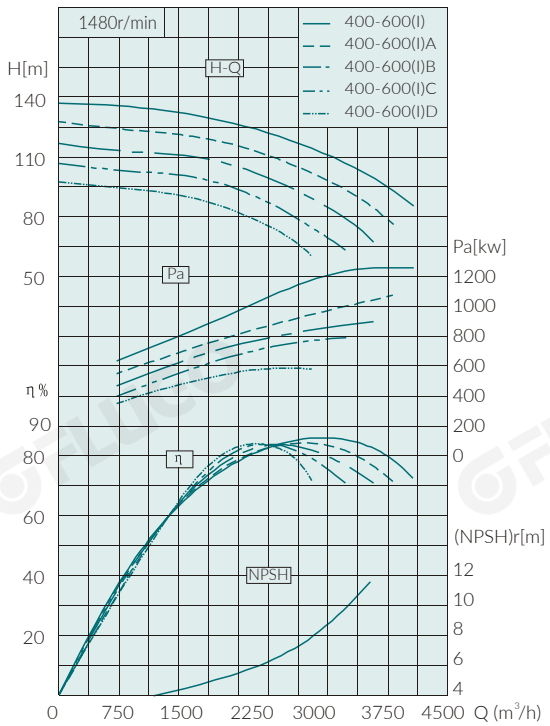

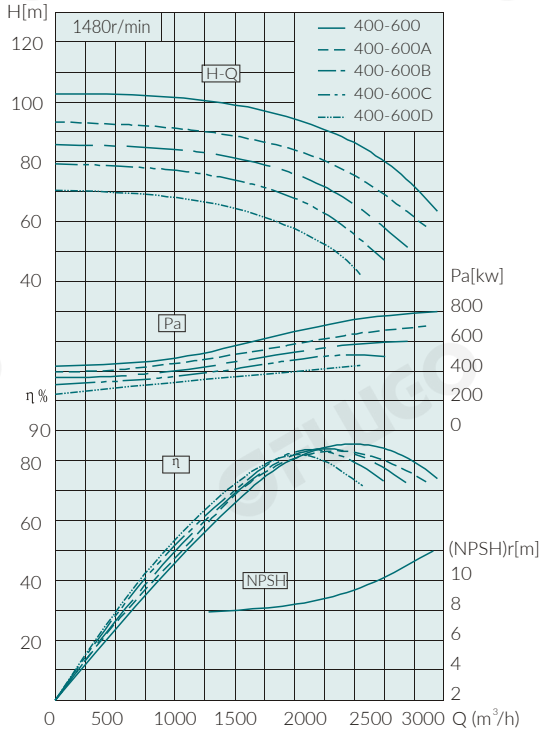

FLUGO reserves the right to change the technical data and dimensions in order to update or improve its product without prior notice.

FAS type pump performance

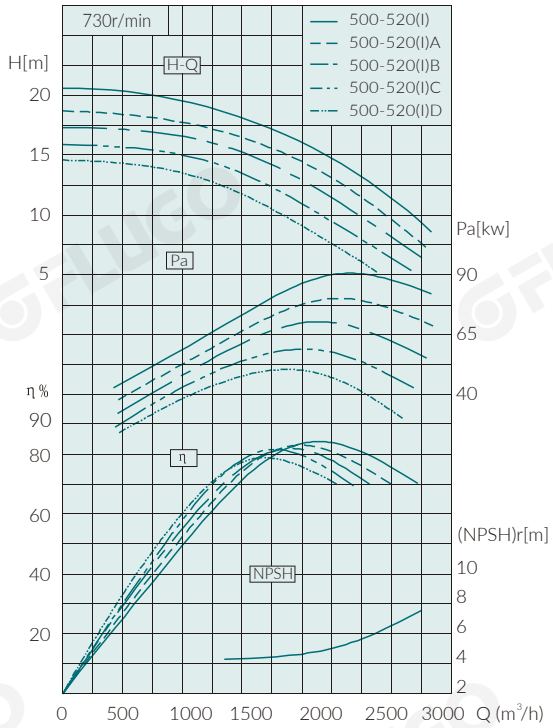

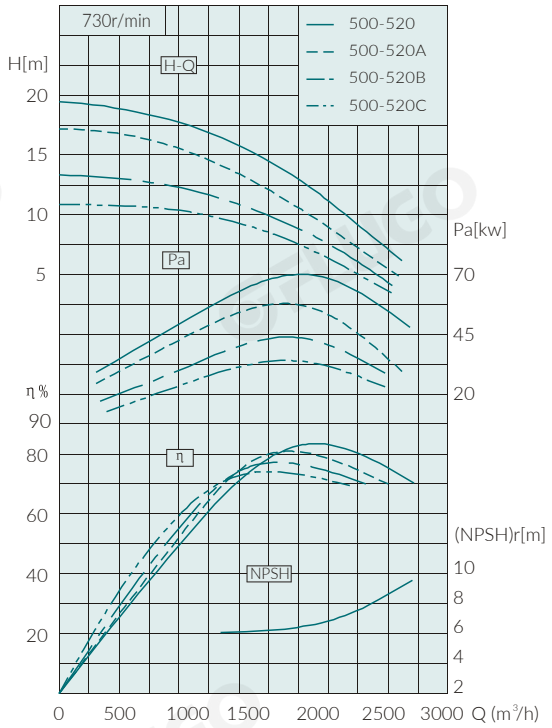

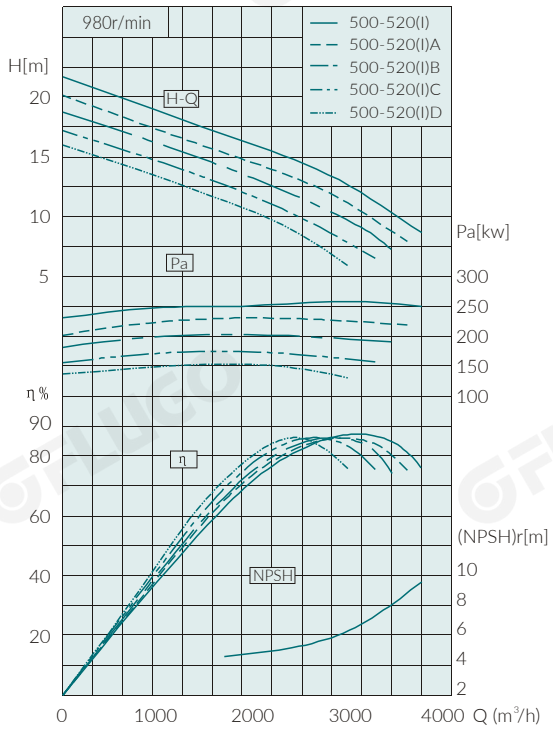

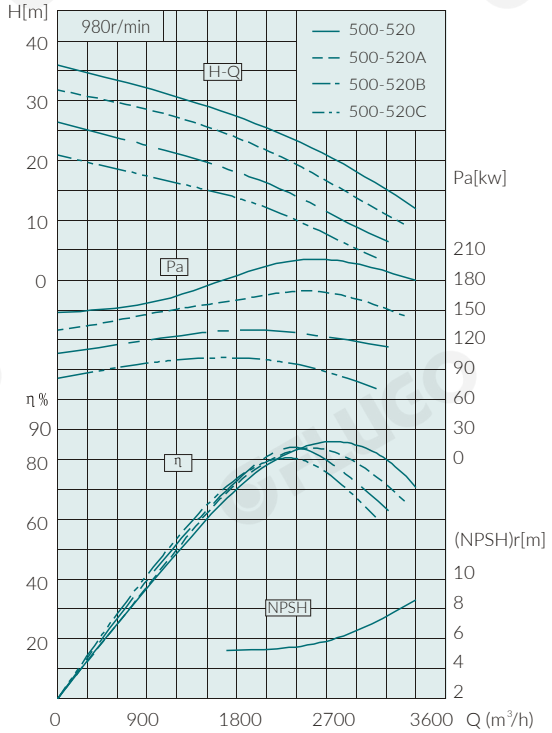

FAS type pump performance curve chart

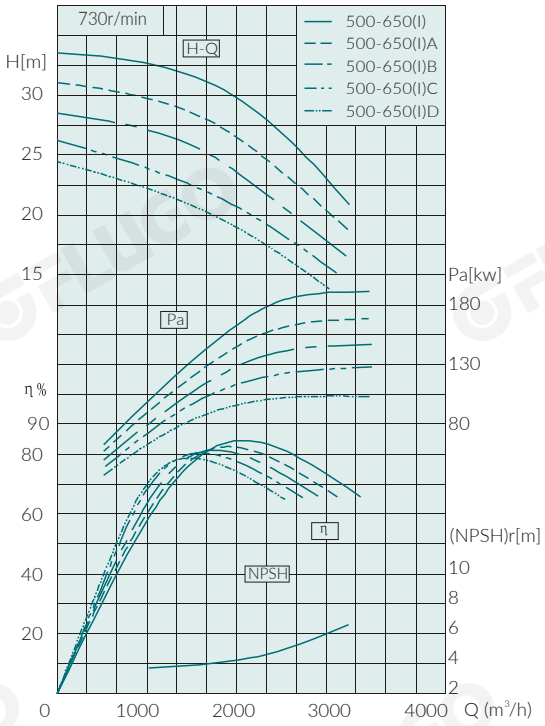

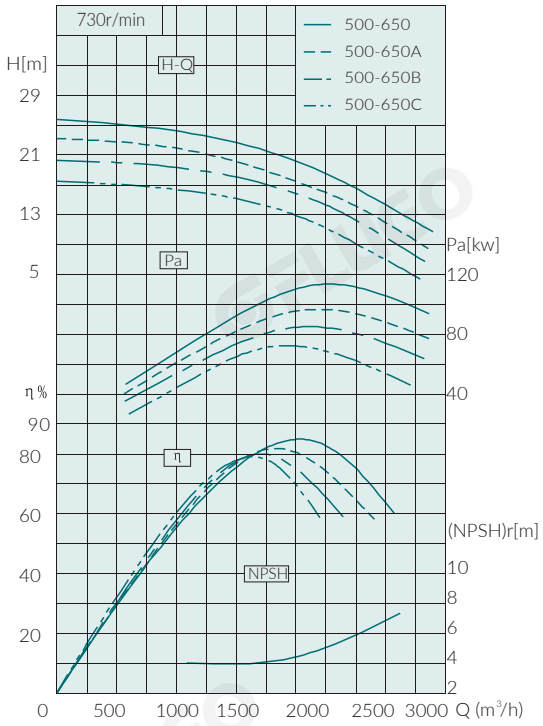

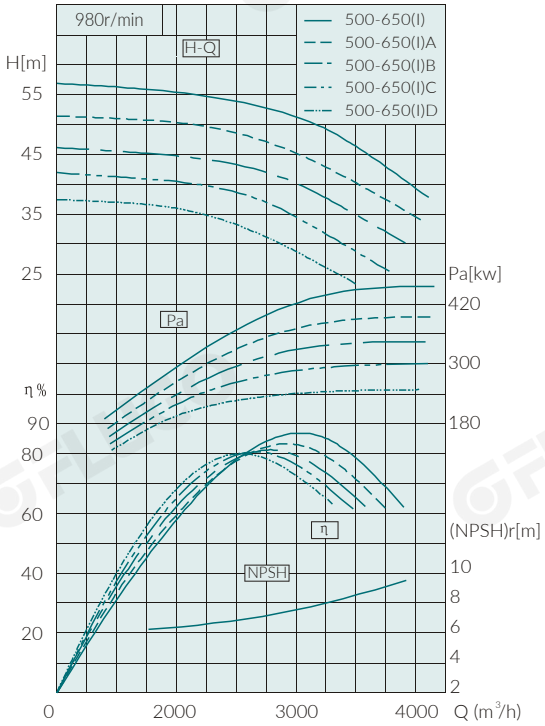

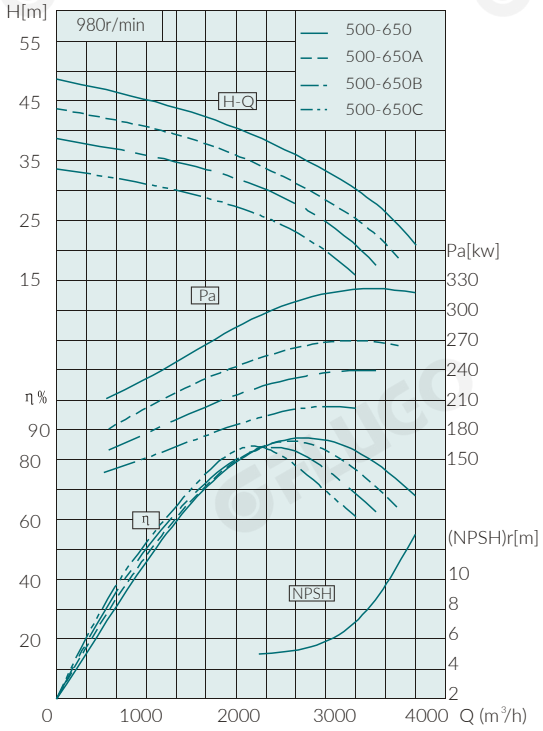

FLUGO reserves the right to change the technical data and dimensions in order to update or improve its product without prior notice.

FAS type pump performance

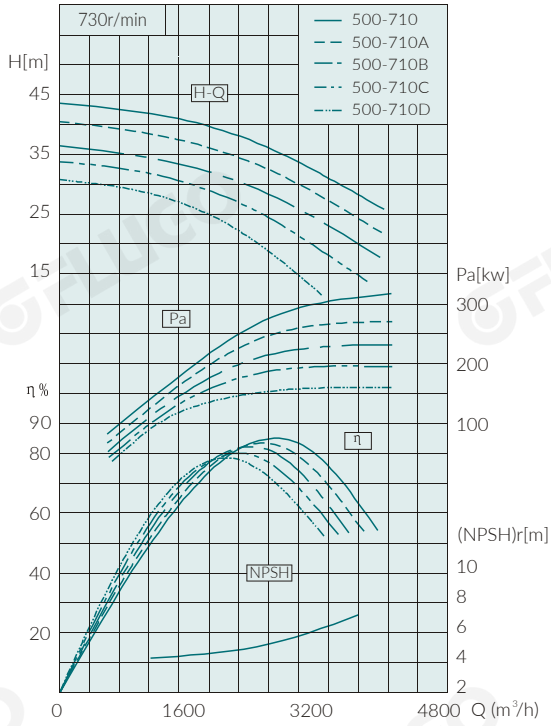

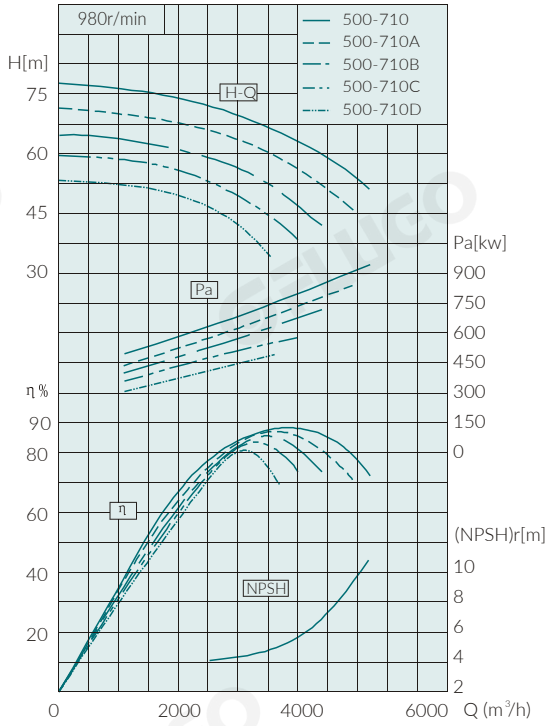

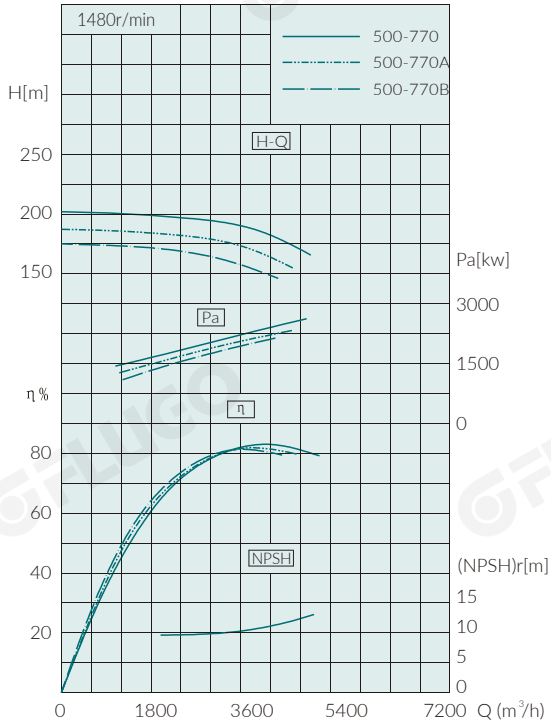

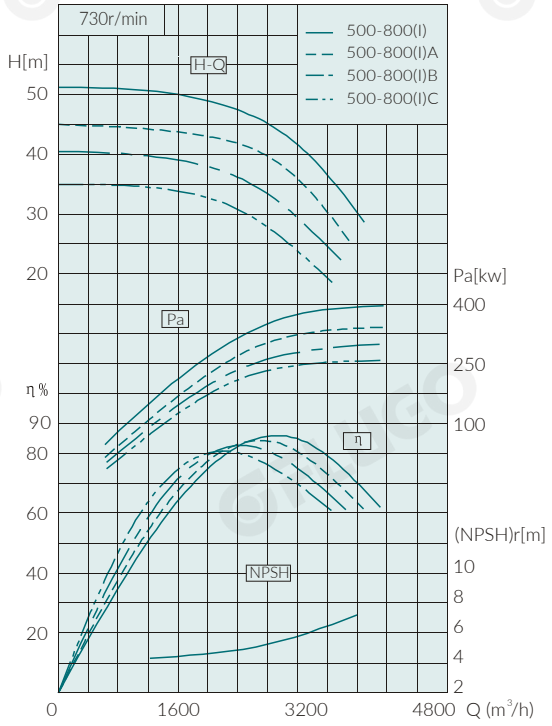

FAS type pump performance

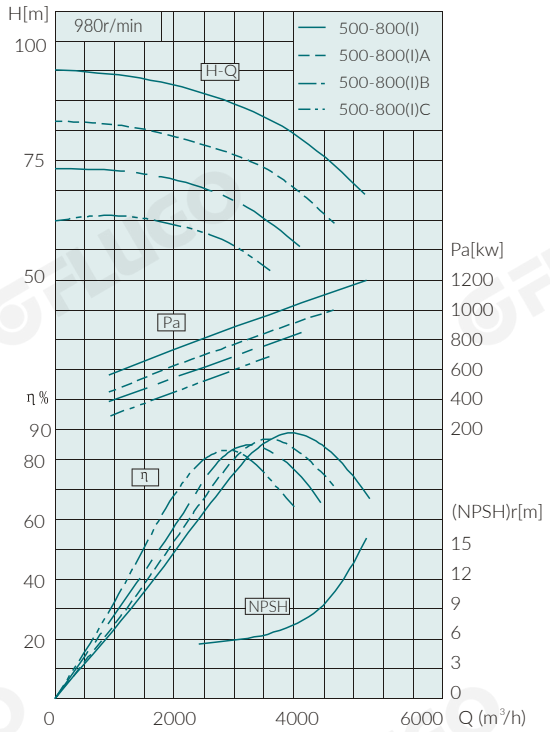

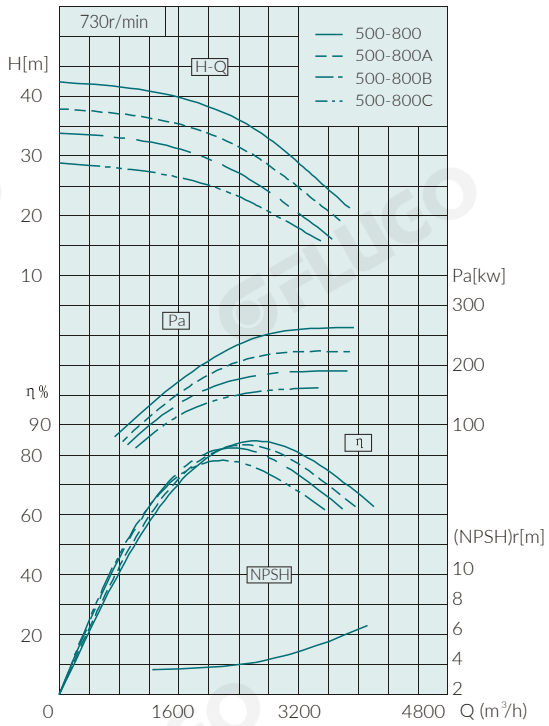

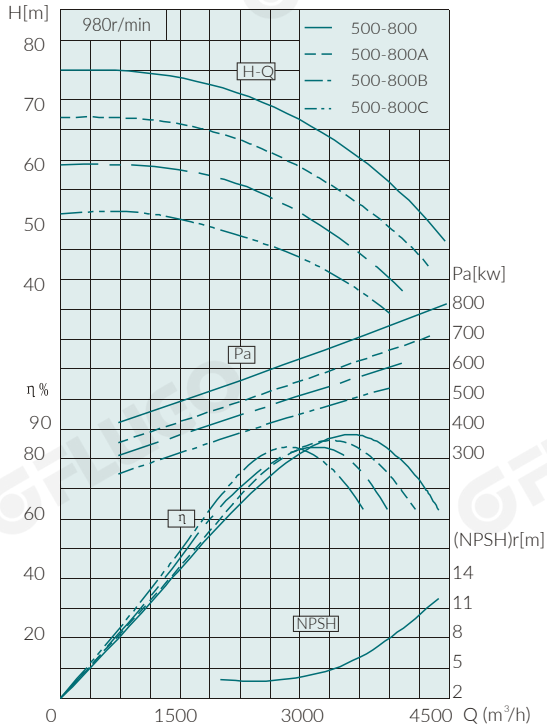

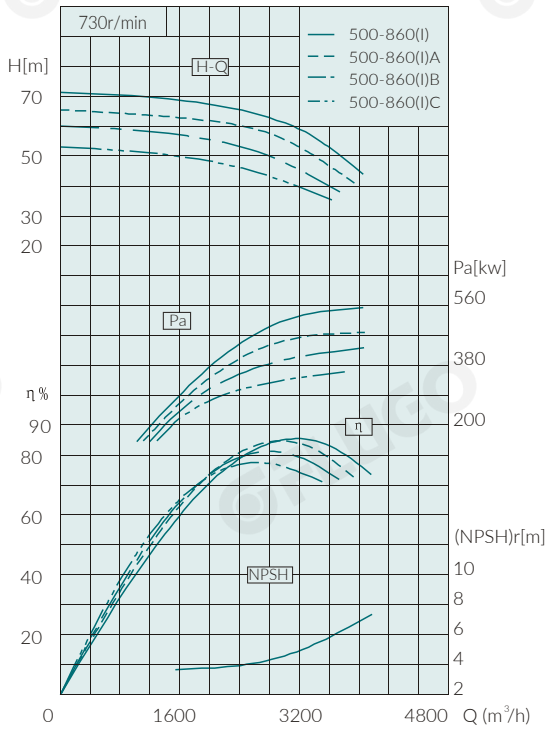

FLUGO reserves the right to change the technical data and dimensions in order to update or improve its product without prior notice.

FAS type pump performance

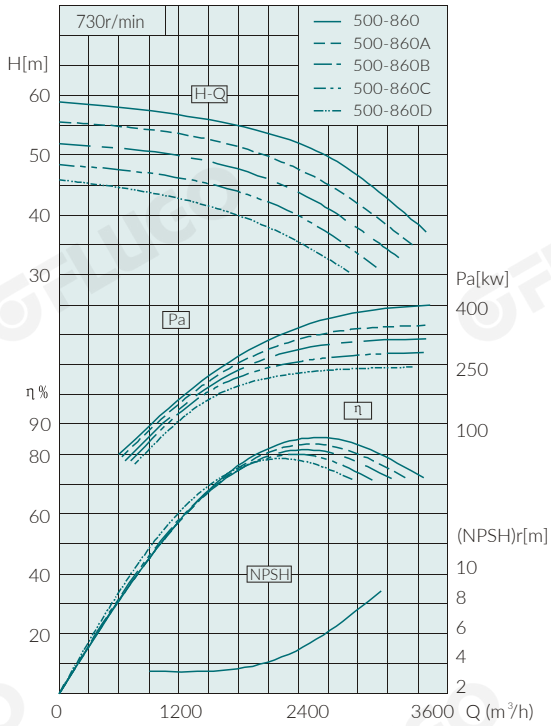

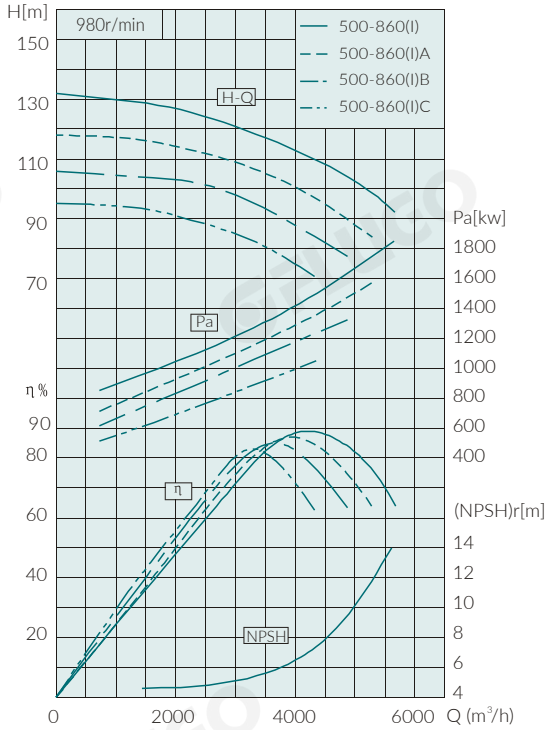

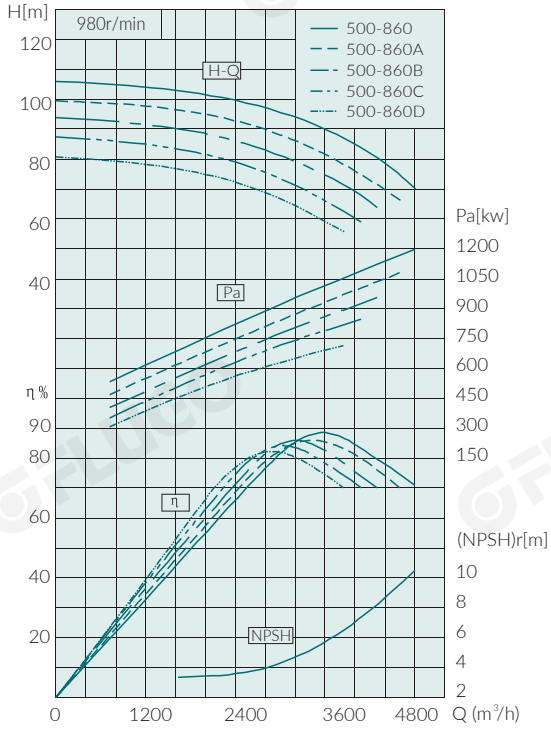

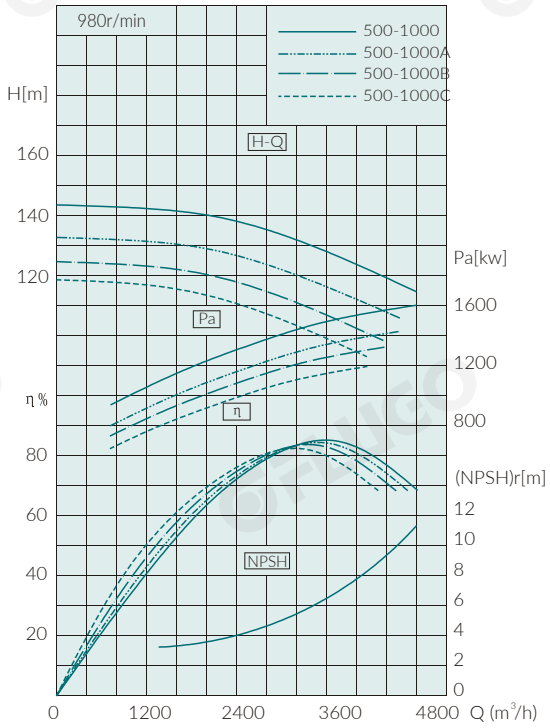

FAS type pump performance curve chart

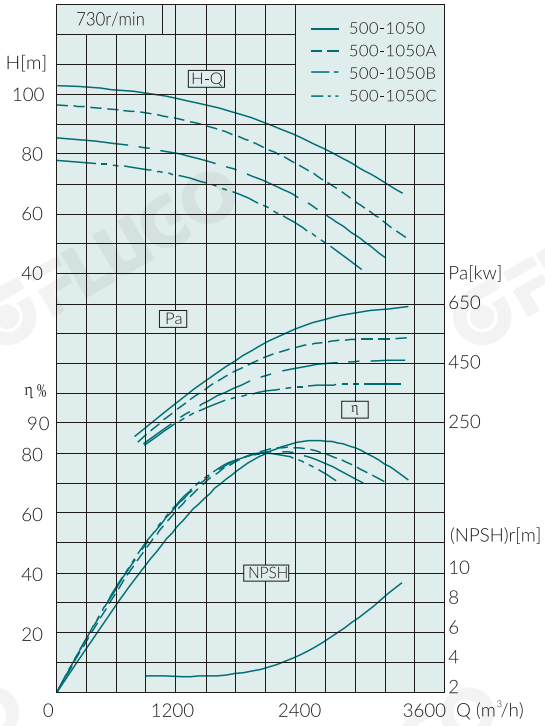

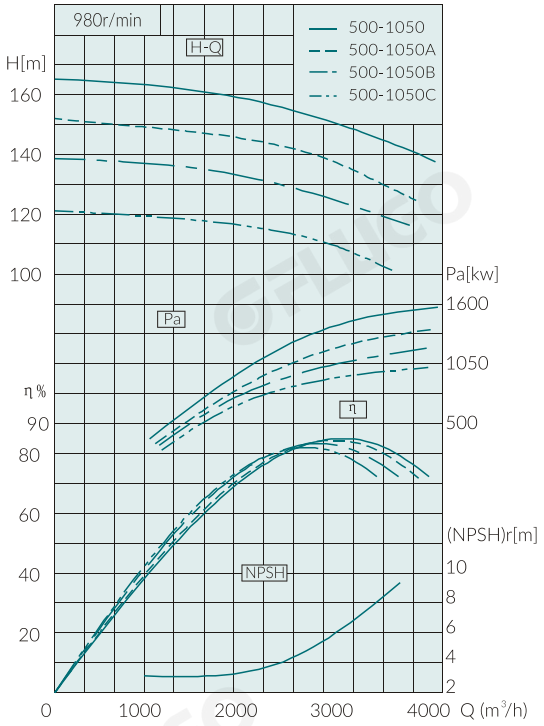

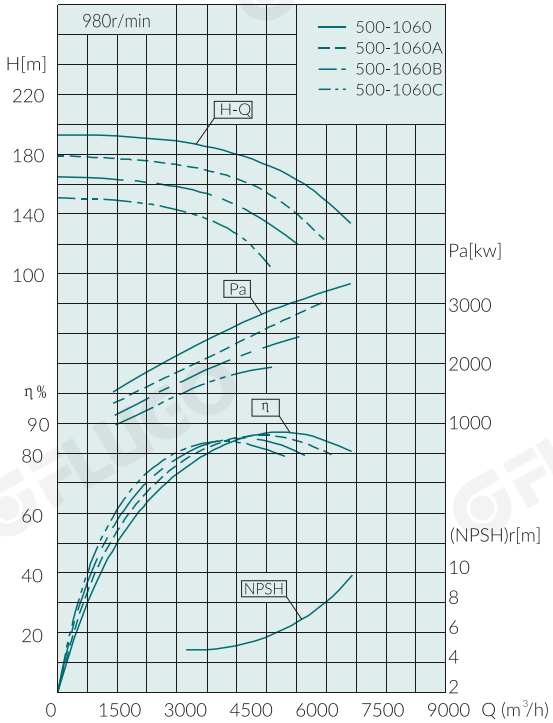

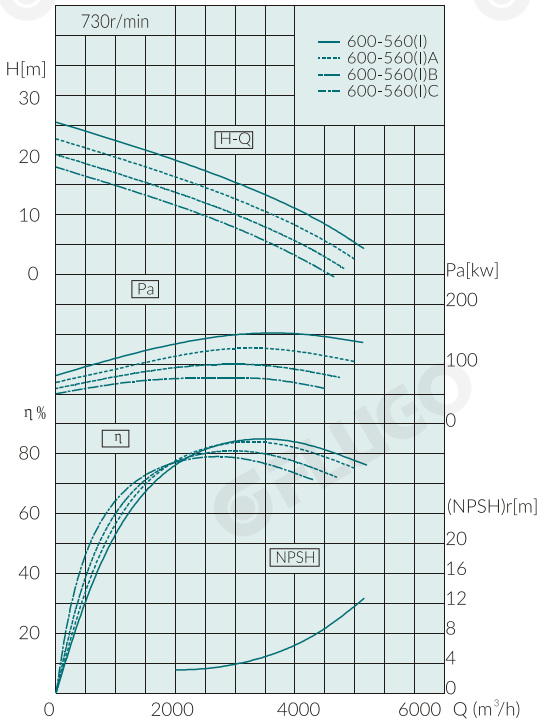

FLUGO reserves the right to change the technical data and dimensions in order to update or improve its product without prior notice.

FAS type pump performance

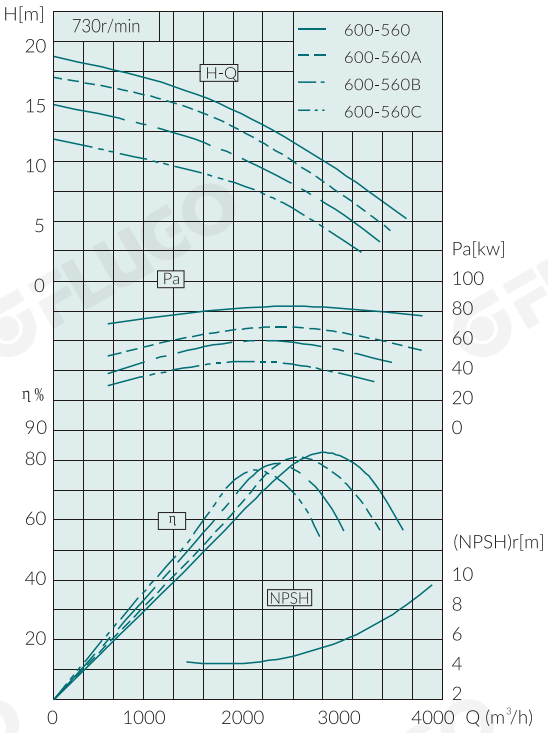

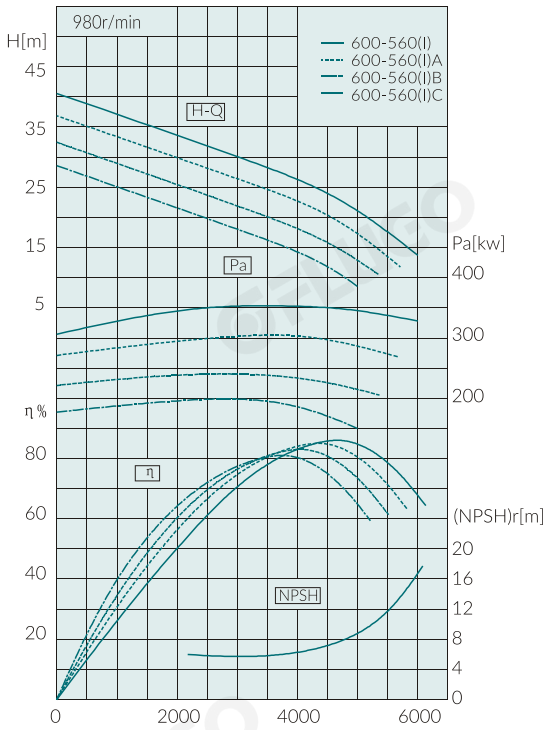

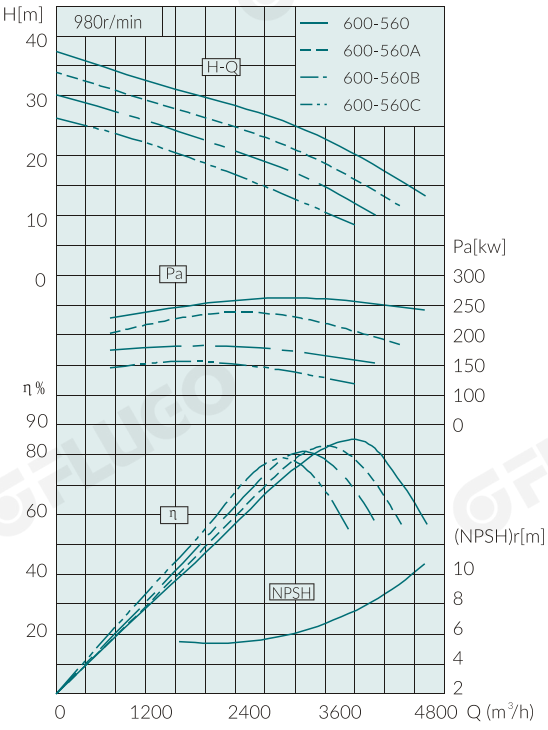

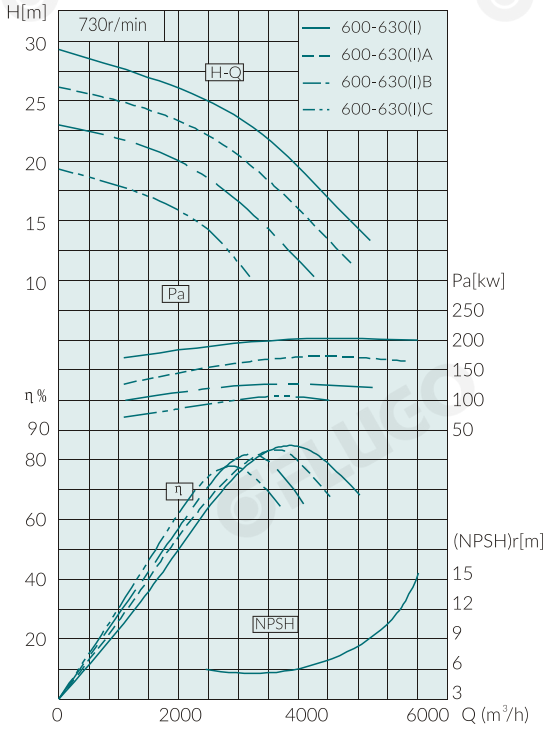

FAS type pump performance

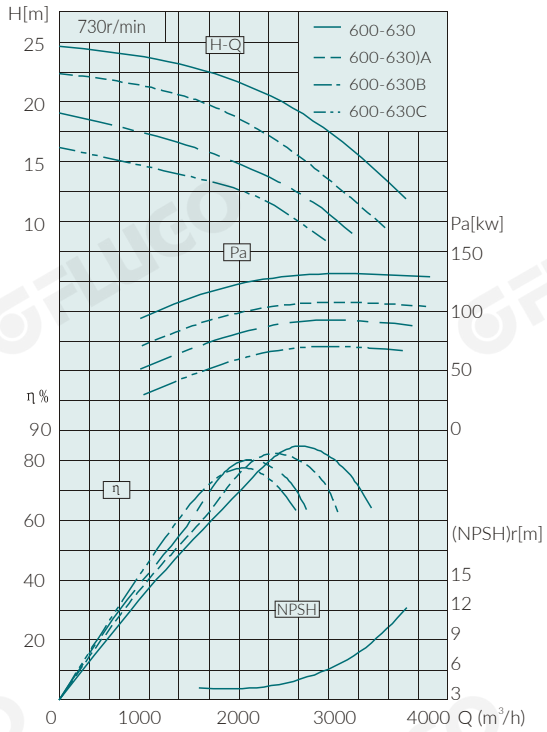

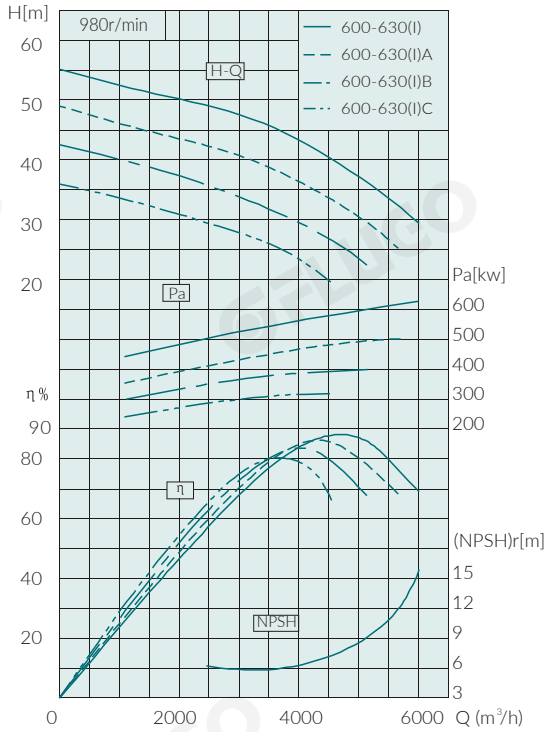

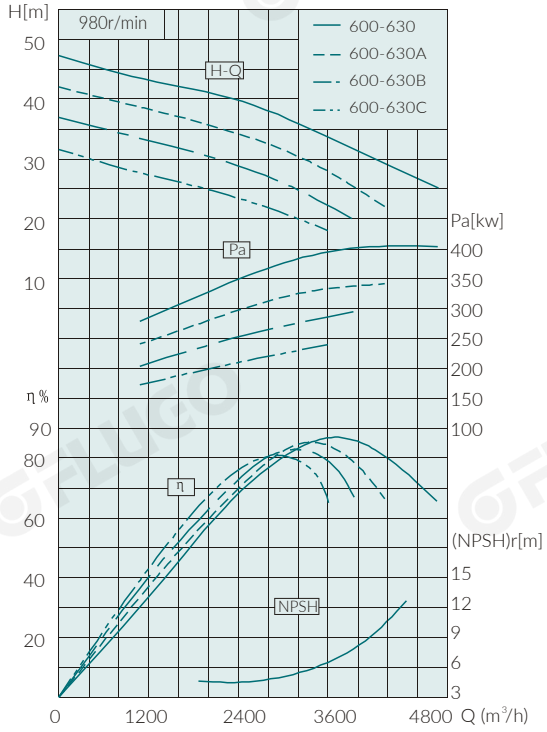

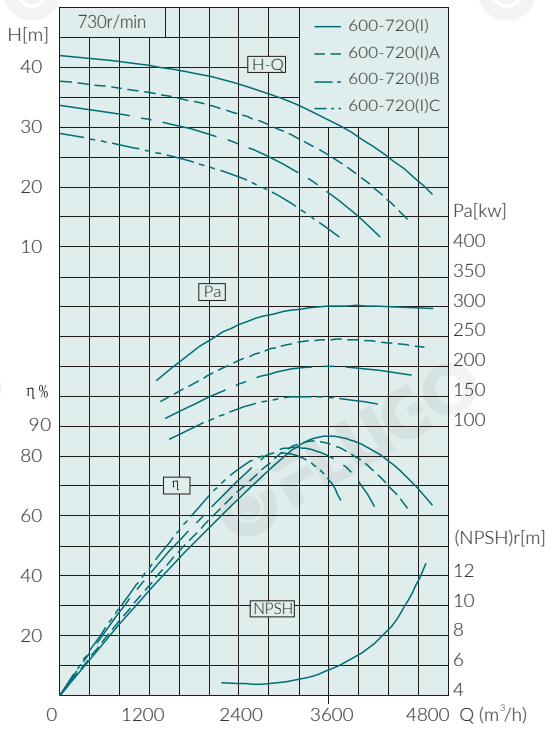

FLUGO reserves the right to change the technical data and dimensions in order to update or improve its product without prior notice.

FAS type pump performance

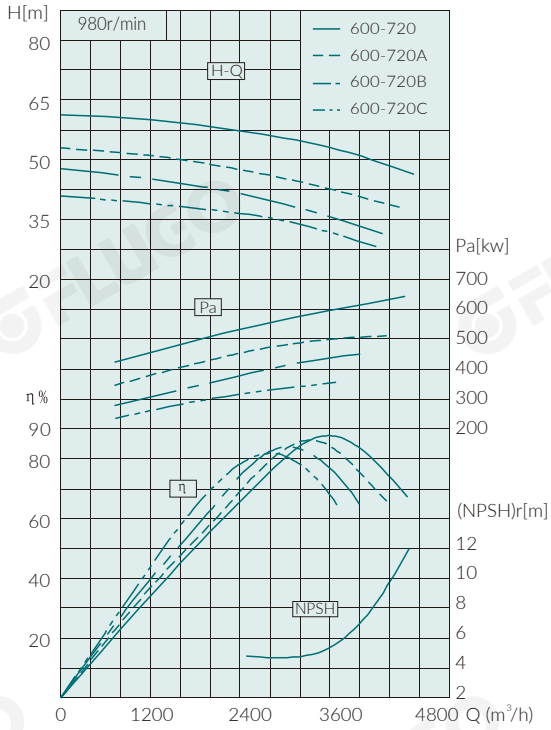

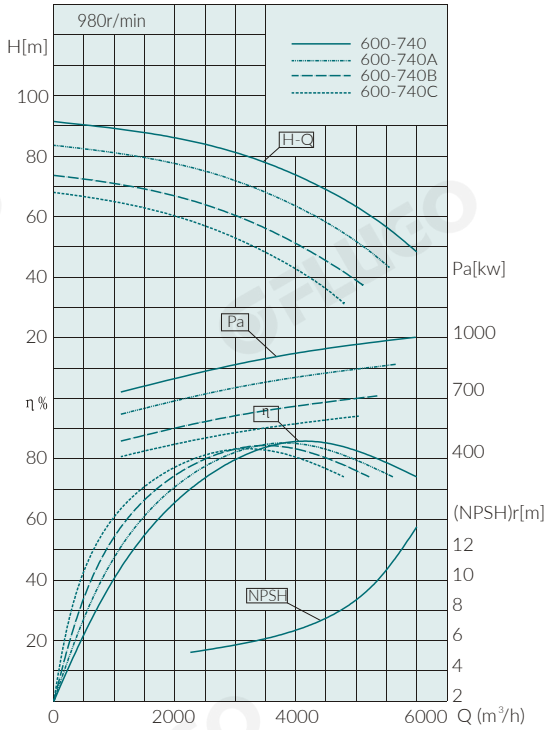

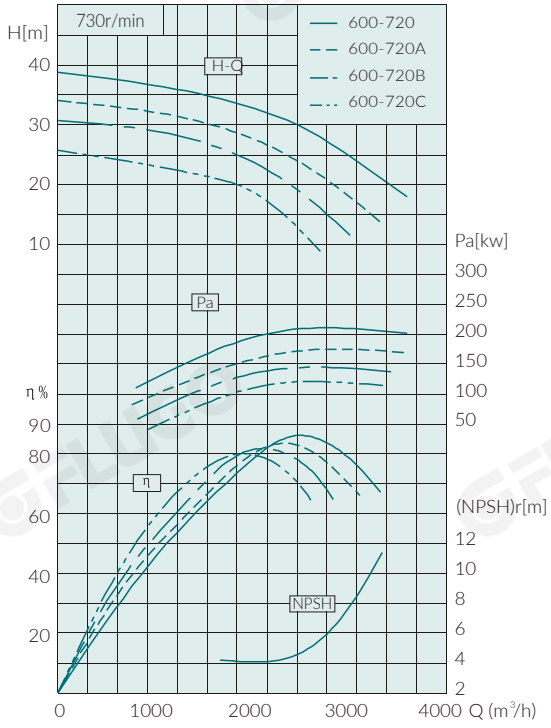

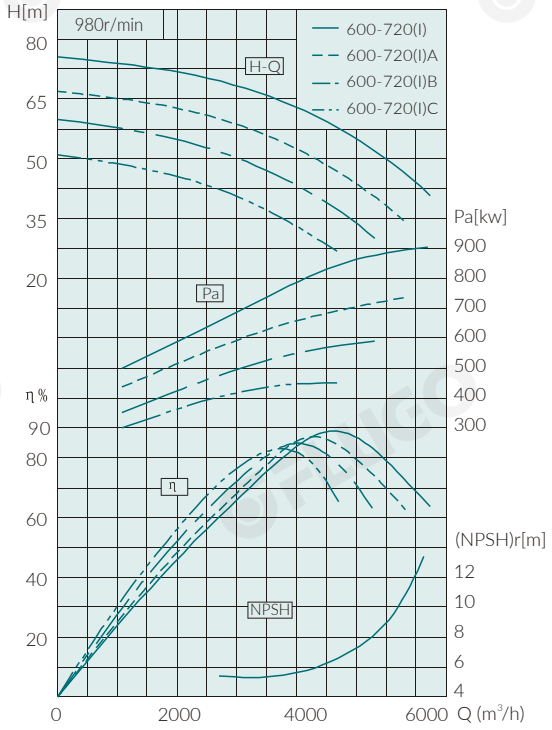

FAS type pump performance curve chart

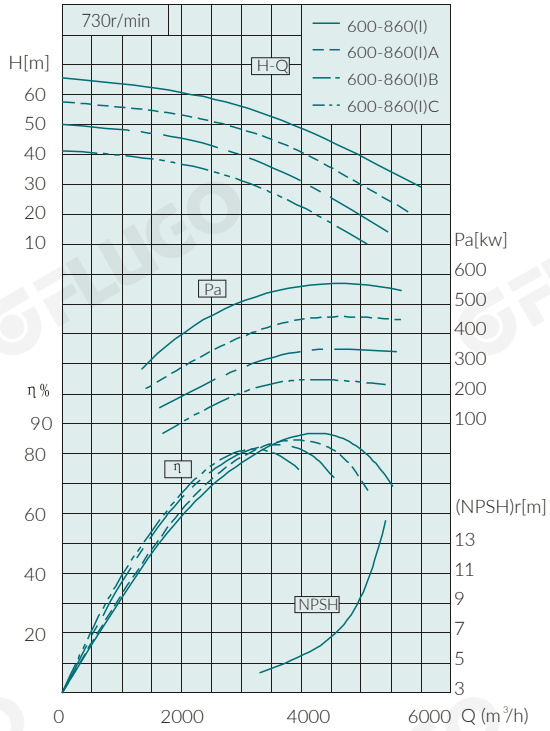

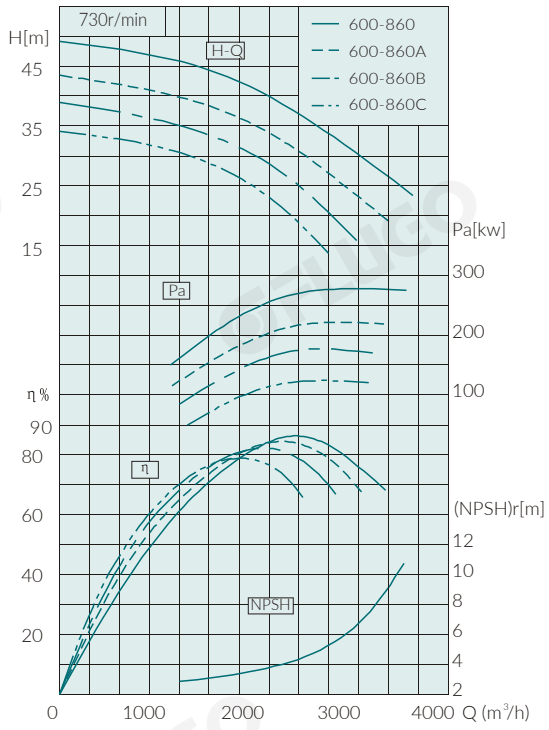

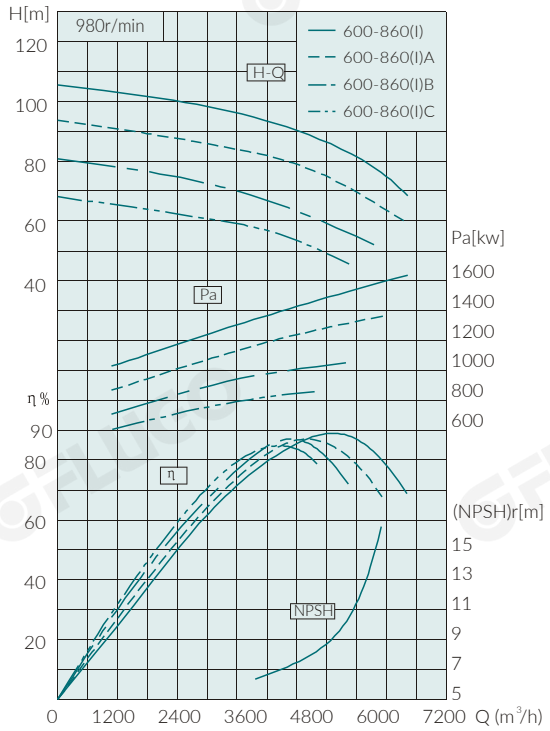

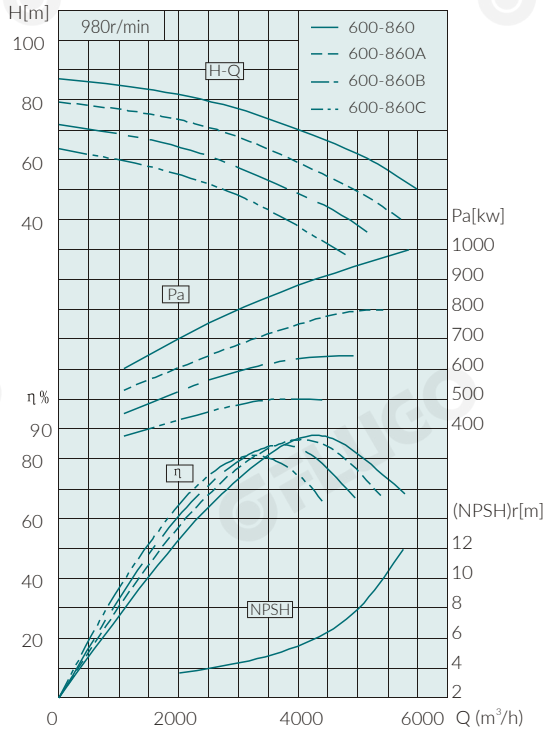

FLUGO reserves the right to change the technical data and dimensions in order to update or improve its product without prior notice.

FAS type pump performance curve chart

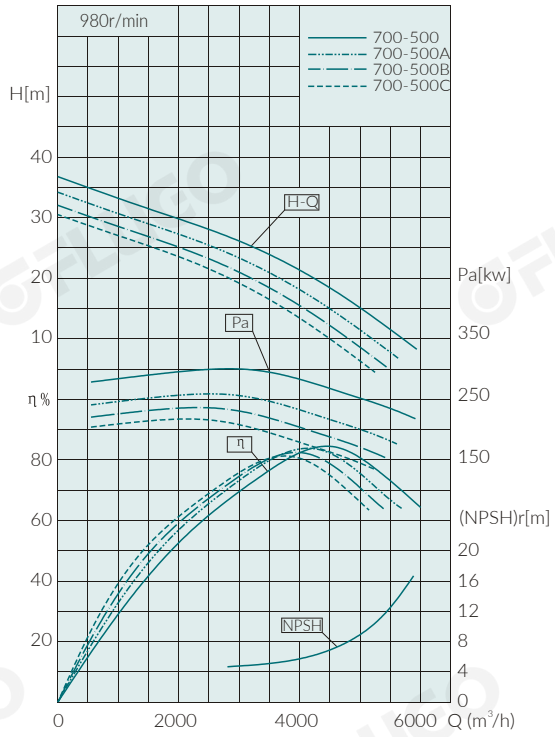

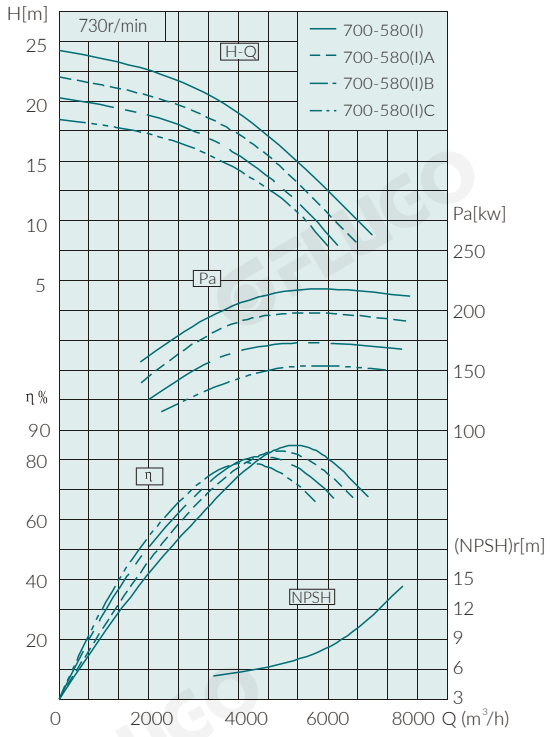

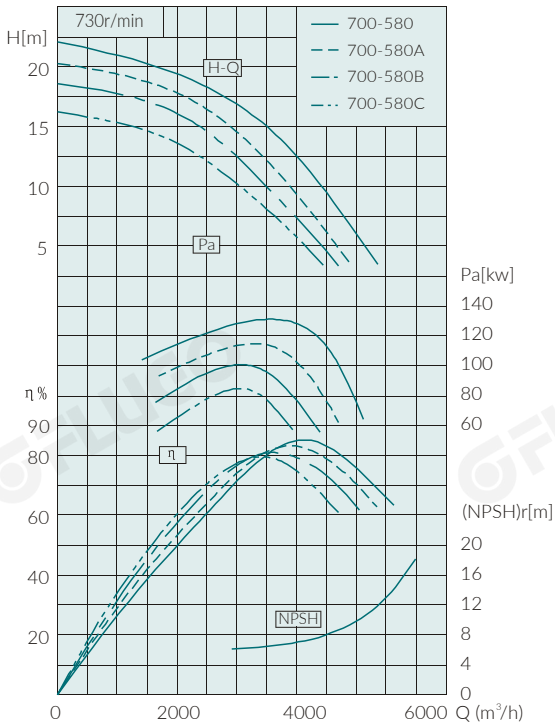

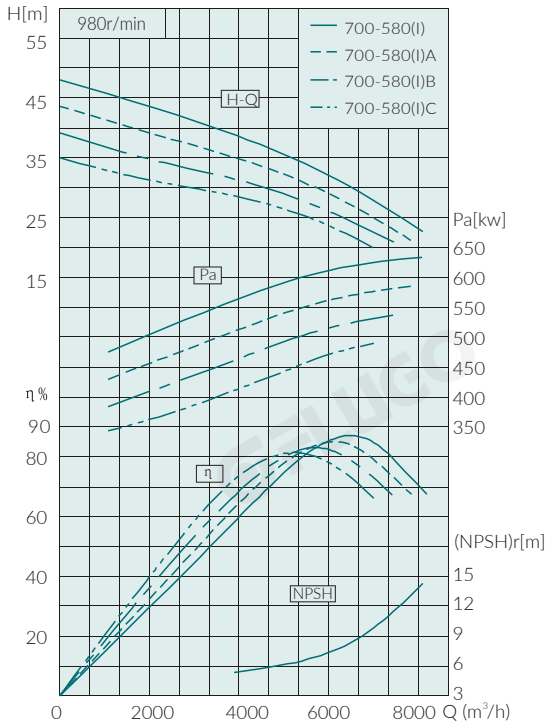

FAS type pump performance curve chart

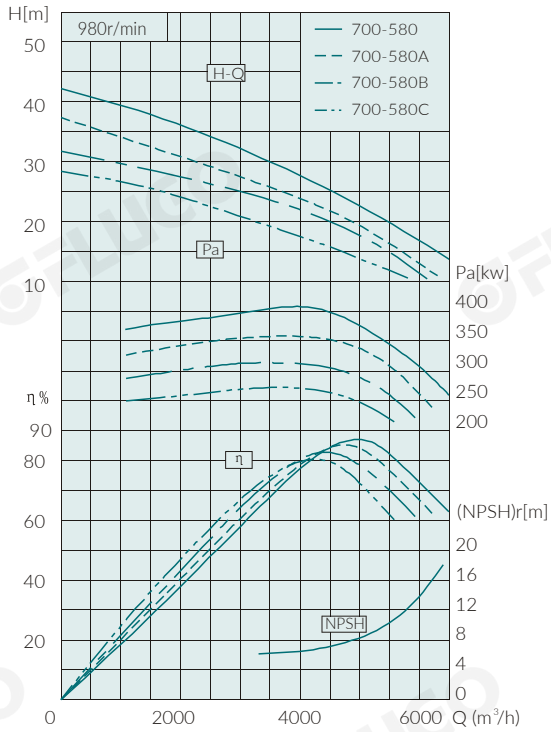

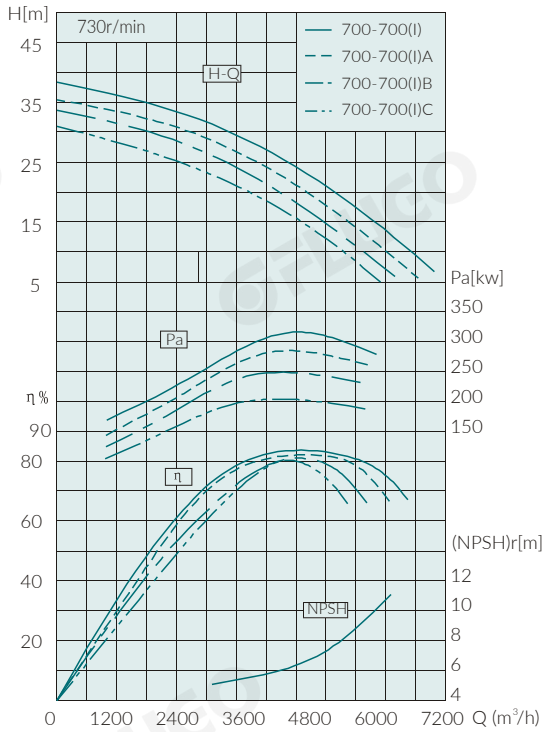

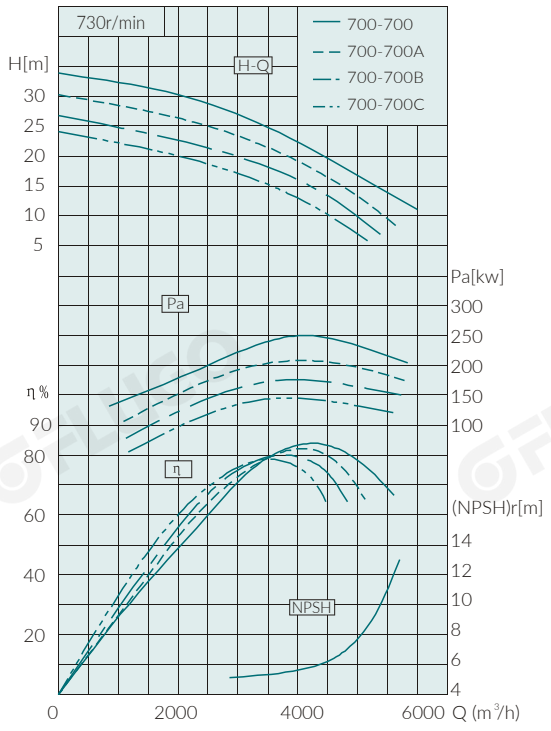

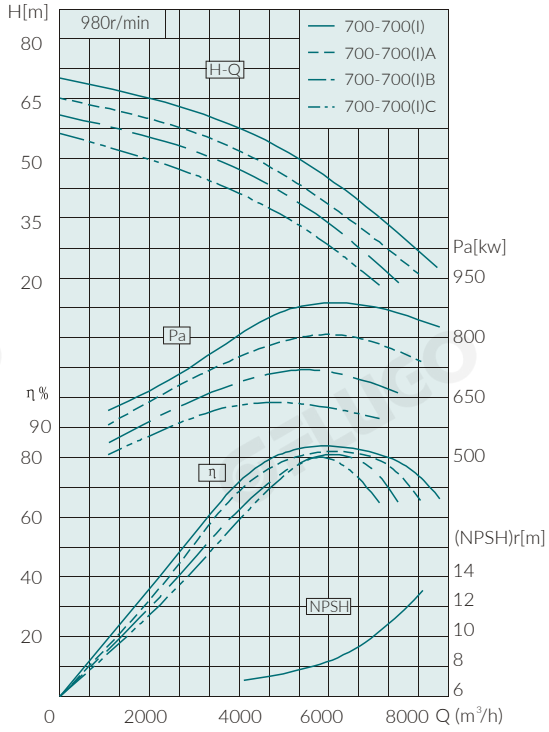

FLUGO reserves the right to change the technical data and dimensions in order to update or improve its product without prior notice.

FAS type pump performance curve chart

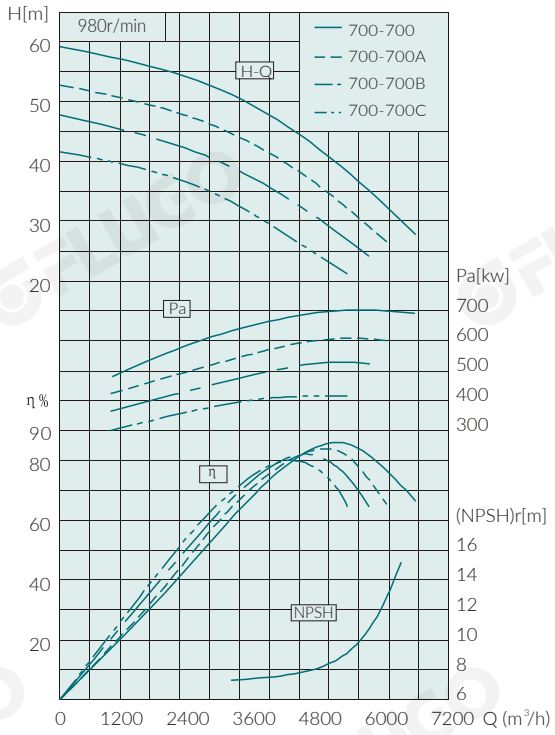

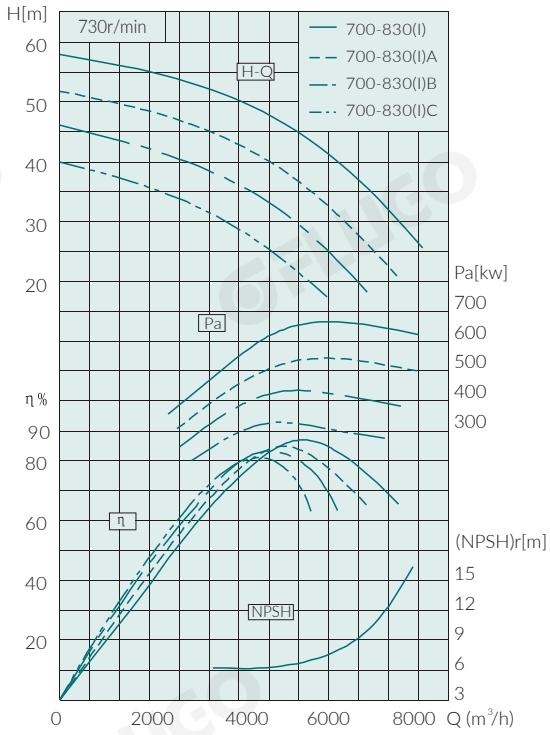

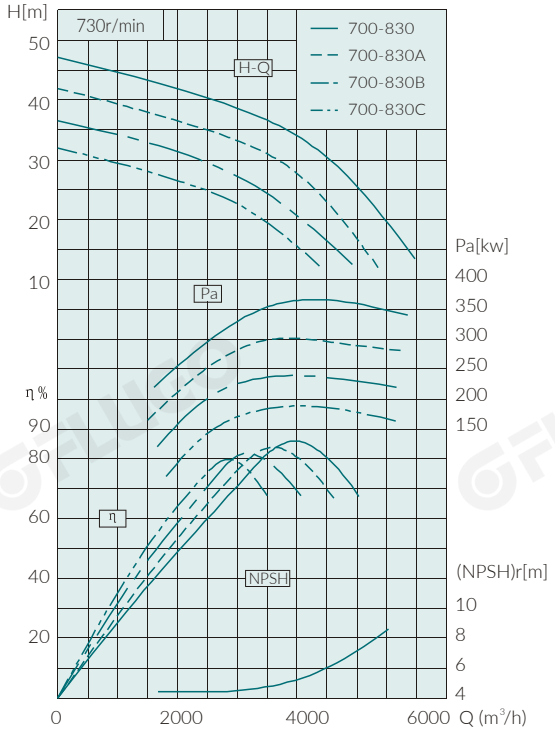

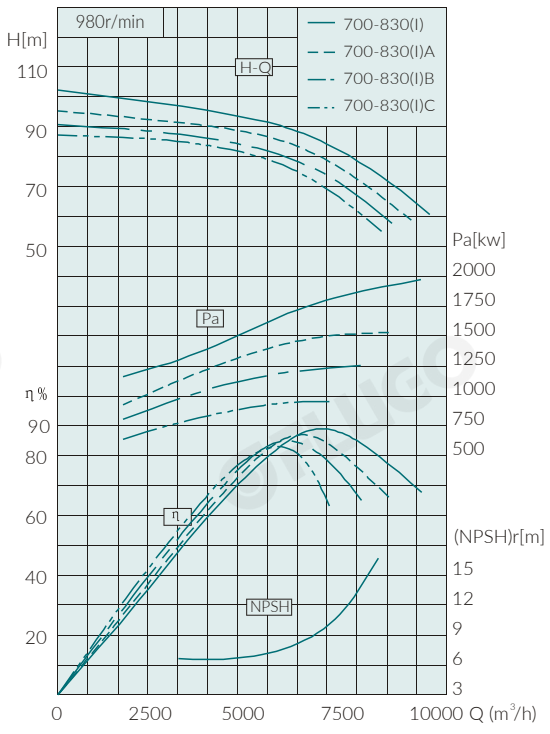

FAS type pump performance curve chart

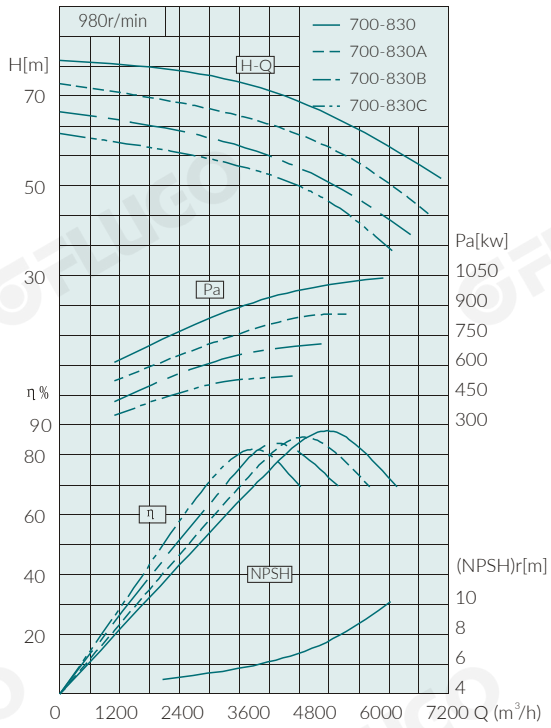

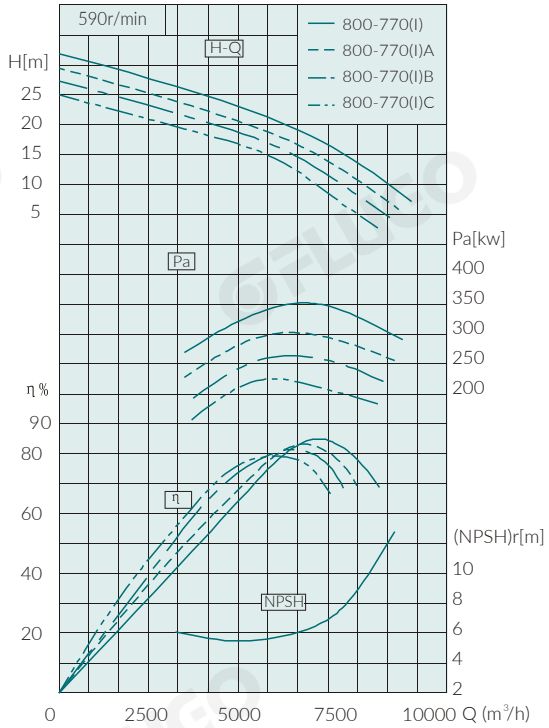

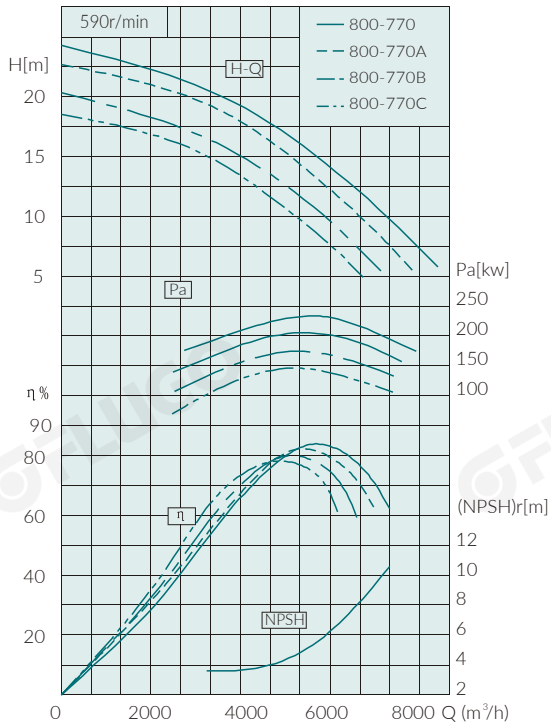

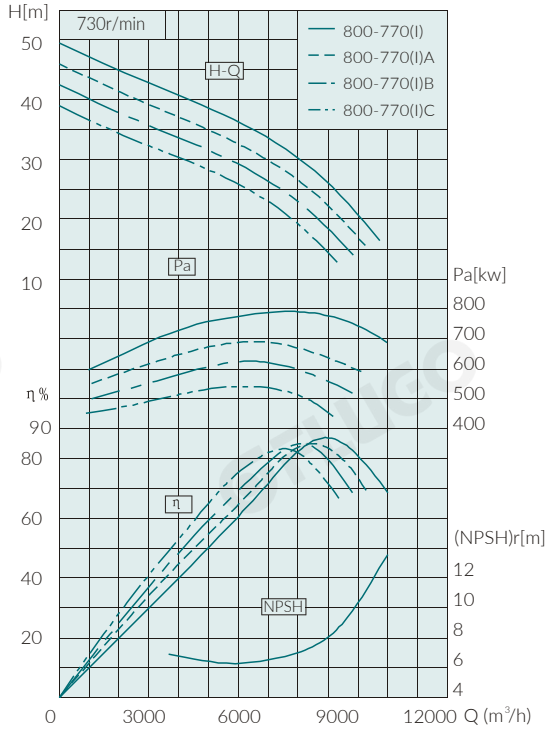

FLUGO reserves the right to change the technical data and dimensions in order to update or improve its product without prior notice.

FAS type pump performance curve chart

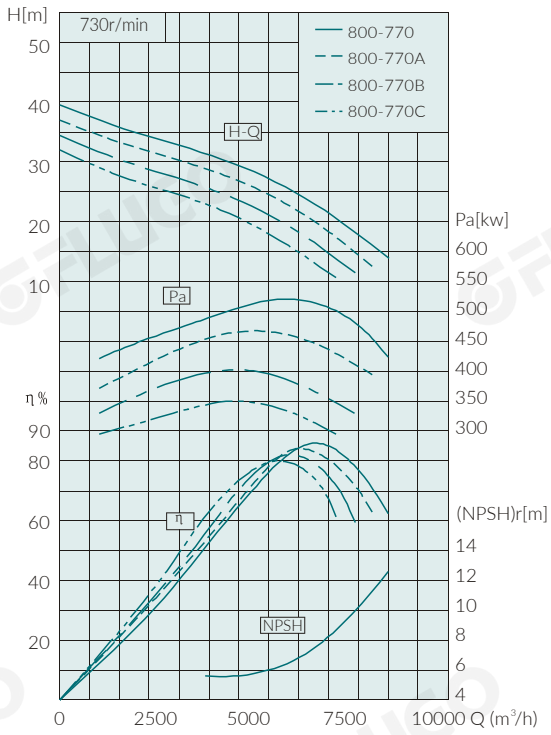

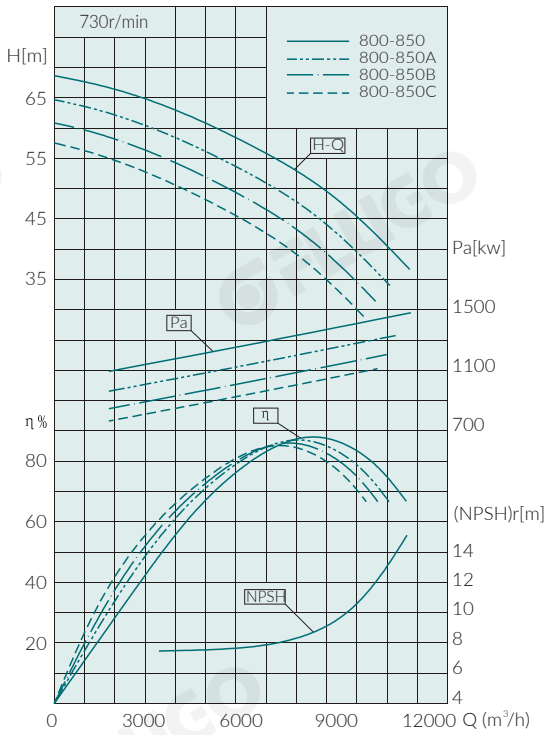

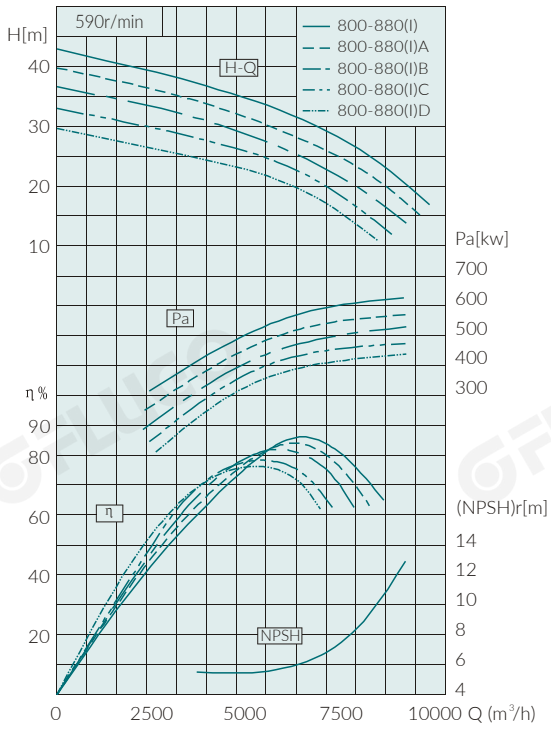

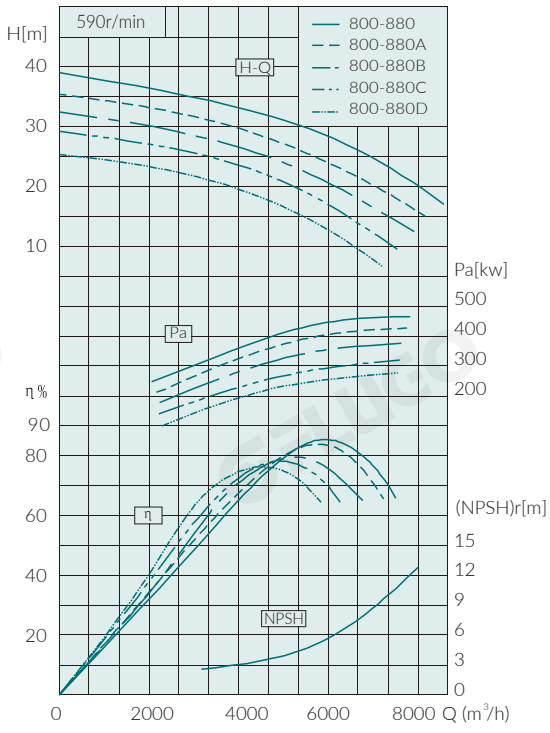

FAS type pump performance curve chart

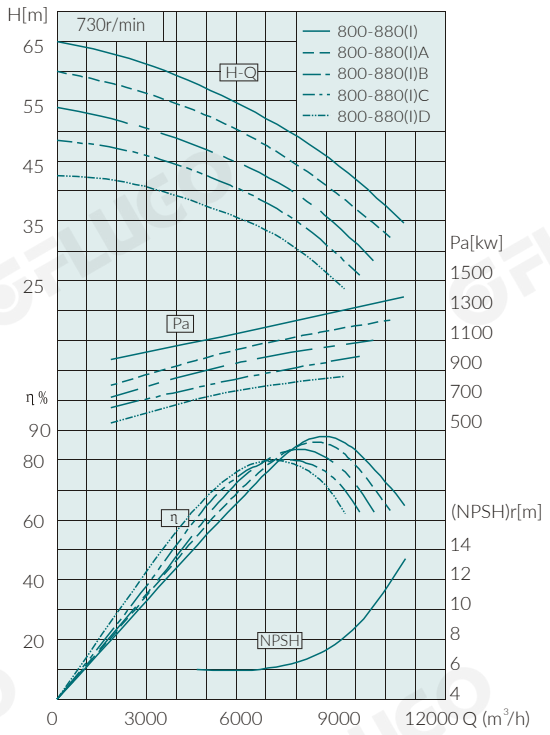

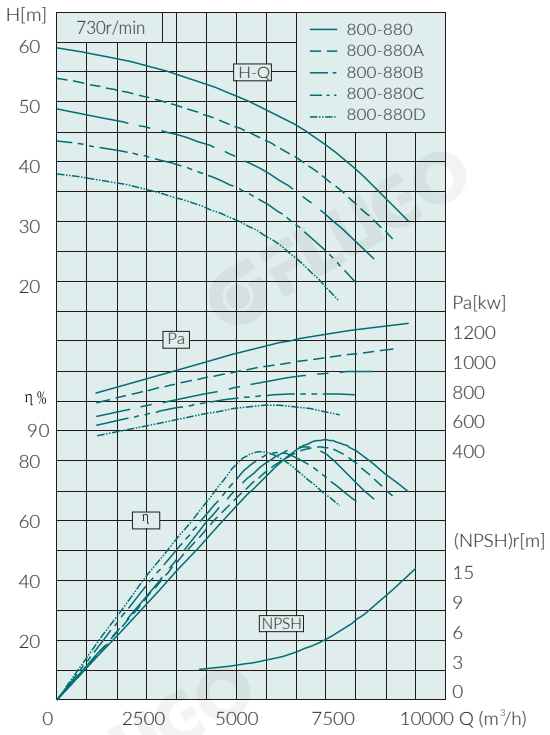

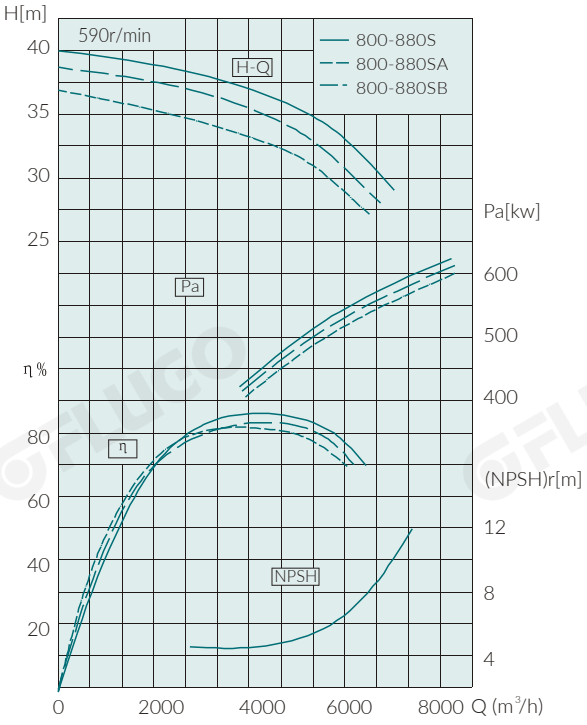

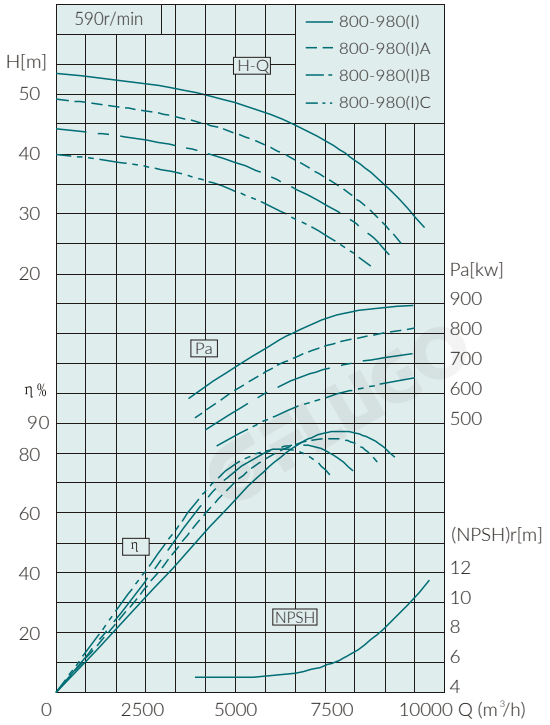

FLUGO reserves the right to change the technical data and dimensions in order to update or improve its product without prior notice.

FAS type pump performance curve chart

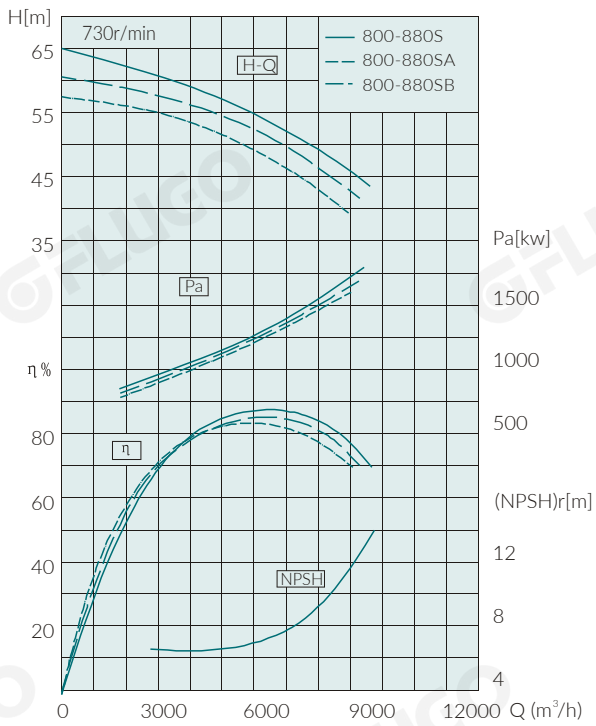

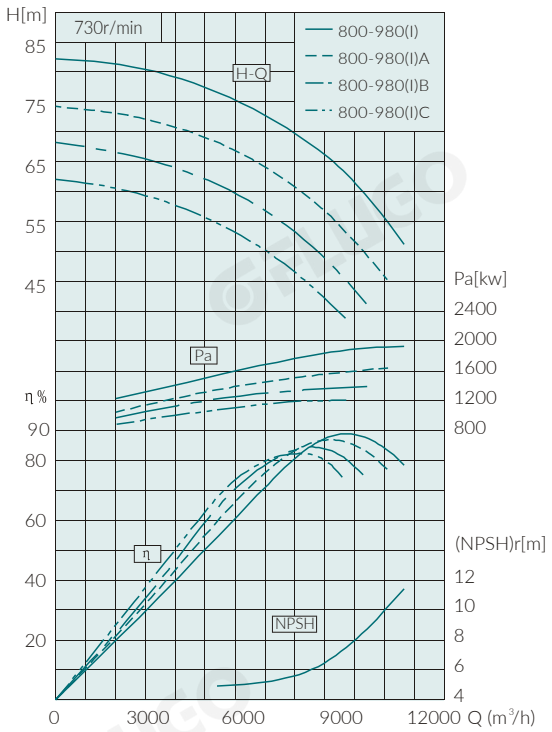

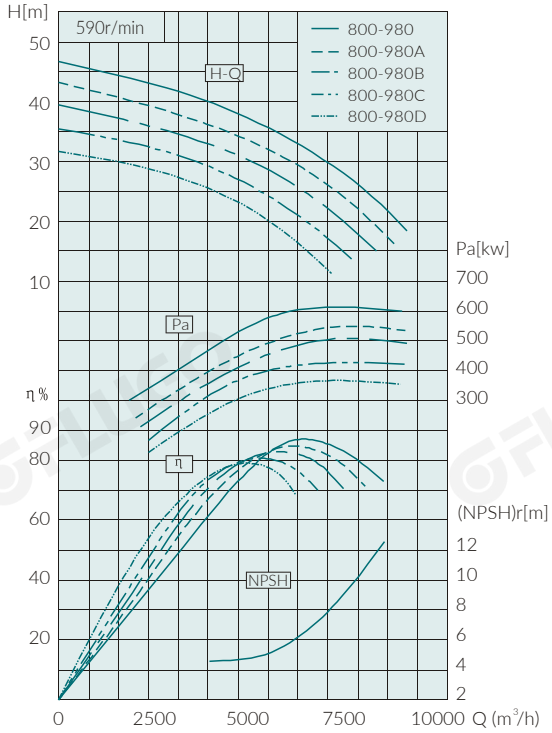

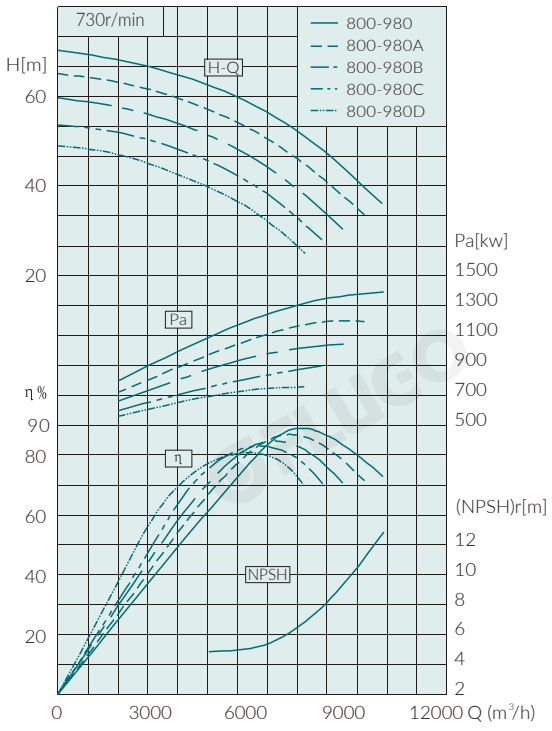

FAS type horizontal pump installation model

A 80-220 350-640

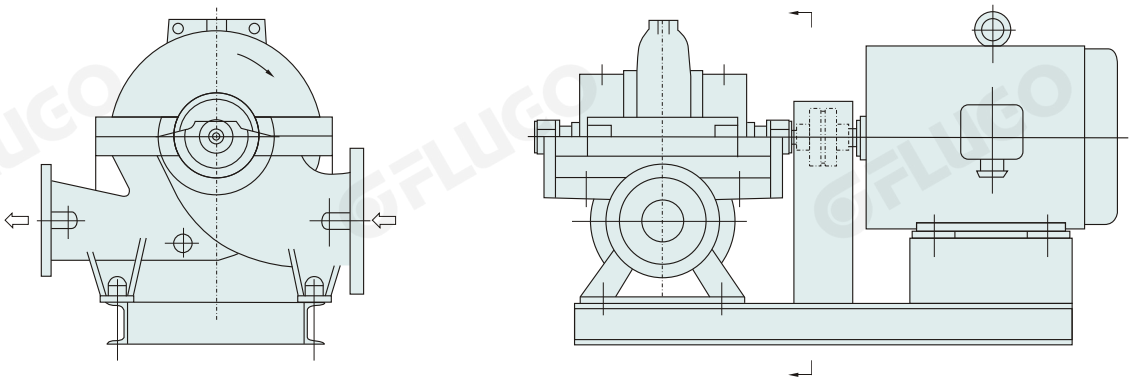

Both pump and motor are mounted on the foundation

B 400-550 800-980

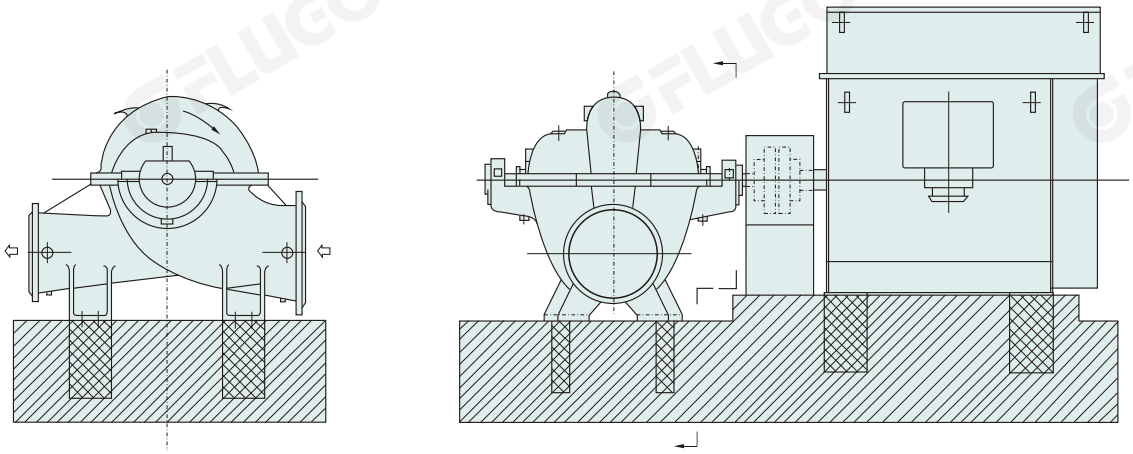

Both pump and motor are mounted on the basic

FLUGO reserves the right to change the technical data and dimensions in order to update or improve its product without prior notice.

FAS type vertical pump installation model

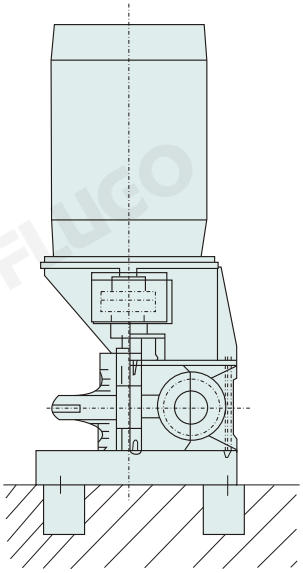

OA[1)]

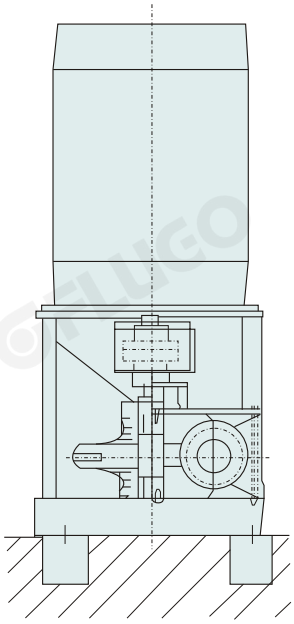

OB[1)]

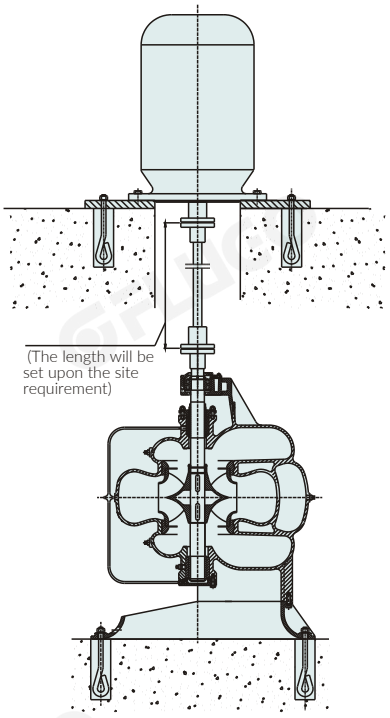

OC[2)]

1) Select upon the motor size, see the installation diagram.

2) Note: this structure is available with the outlet of 400 aperture below, please contact with the technical center in case of a special requirement!

(Both motor and water pump hold a basis of their own and are joint to the pump directly or via an intermittent shaft)

Rotating direcdtion/flowing direction

Horizontally

Vertically

It moves CCW viewing from the actuation end

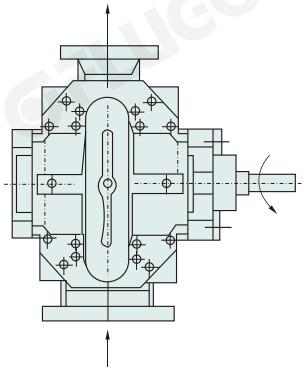

It moves CW viewing from the actuation end

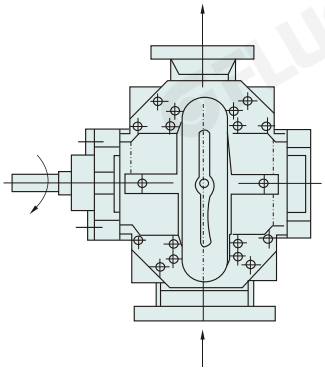

It moves CCW viewing from the actuation end

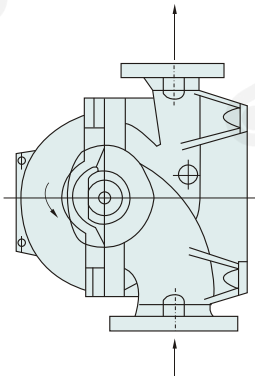

It moves CW viewing from the actuation end

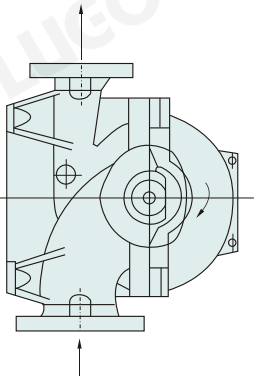

FAS type conjunction flange dimension

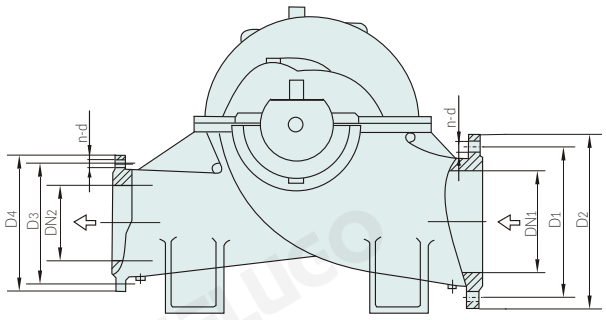

Note : The following inlet and outlet flanges that are not marked with nominal diameters are PN1.6

Pump type	Inlet diameter	Inlet flange dimension			Outlet diameter	Outlet flange dimension		
	DN_1	D_1	D_2	n-d	DN_2	D_3	D_4	n-d
80-220	125	210	250	8-19	80	160	200	8-19
80-280								
80-350								
100-260	150	240	285	8-23	100	180	220	8-19
100-300								
100-320								
100-400								
125-240	200	295	340	12-23	125	210	250	8-19
125-300								
125-380								
125-400					125(PN2.5)	220	270	8-28
125-450					125(PN4.0)			
125-480					125	210	250	8-19
125-570								
150-280	200	295	340	12-23	150	240	285	8-23
150-310								
150-450								
150-570								
200-340	250	355	405	12-28	200	295	340	12-23
200-410								
200-530								
200-660					200 (PN2.5)	310	360	12-28
200-740								
250-390	300	410	460	12-28	250	355	405	12-28
250-470								
250-550	350	470	520	16-28				
250-600								
250-820	350	470	520	16-28	250(PN2.5)	370	425	12-31

FLUGO reserves the right to change the technical data and dimensions in order to update or improve its product without prior notice.

FAS type conjunction flange dimension

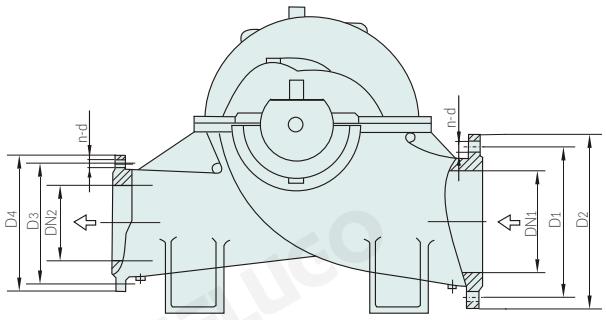

Note : The following inlet and outlet flanges that are not marked with nominal diameters are PN1.6

Pump type	Inlet diameter	Inlet flange dimension			Outlet diameter	Outlet flange dimension		
	DN_1	D_1	D_2	n-d	DN_2	D_3	D_4	n-d
300-330	350	470	520	16-28	300	410	460	12-28
300-450	400	525	580	16-31				
300-550								
300-710					300(PN2.5)	430	485	16-31
350-380	400	525	580	16-31	350	470	520	16-28
350-440	450	585	640	20-31				
350-520								
350-610	500	650	715	20-34				
350-640	400	525	580	16-31				
350-800	450	585	640	20-31	350(PN2.5)	490	555	16-34
400-550	500	650	715	20-34	400	525	580	16-31
400-600								
400-660					400(PN2.5)	550	620	16-37
500-520	600	770	840	20-37	500	650	715	20-34
500-650								
500-710								
500-770					500(PN2.5)	660	730	20-37
500-800					500	650	715	20-34
500-860								
500-1000	700	840	910	24-37	500(PN2.5)	660	730	20-37
500-1050								
500-1060								
600-560	700	840	910	24-37	600	770	840	20-37
600-630								
600-720								
600-740								
600-860								
600-900	800(PN1.0)	950	1015	24-34				
700-500	700(PN1.0)	840	895	24-31	700(PN1.0)	840	895	24-31
700-580	800	950	1025	24-40	700	840	910	24-37
700-700								
700-830								
800-770	900	1050	1125	28-40	800	950	1025	24-40
800-850								
800-880								
800-980								

FAS type pump installation dimension

80-220 to 80-350 (see structural 1,3) installation dimension

Rotating direction:CW

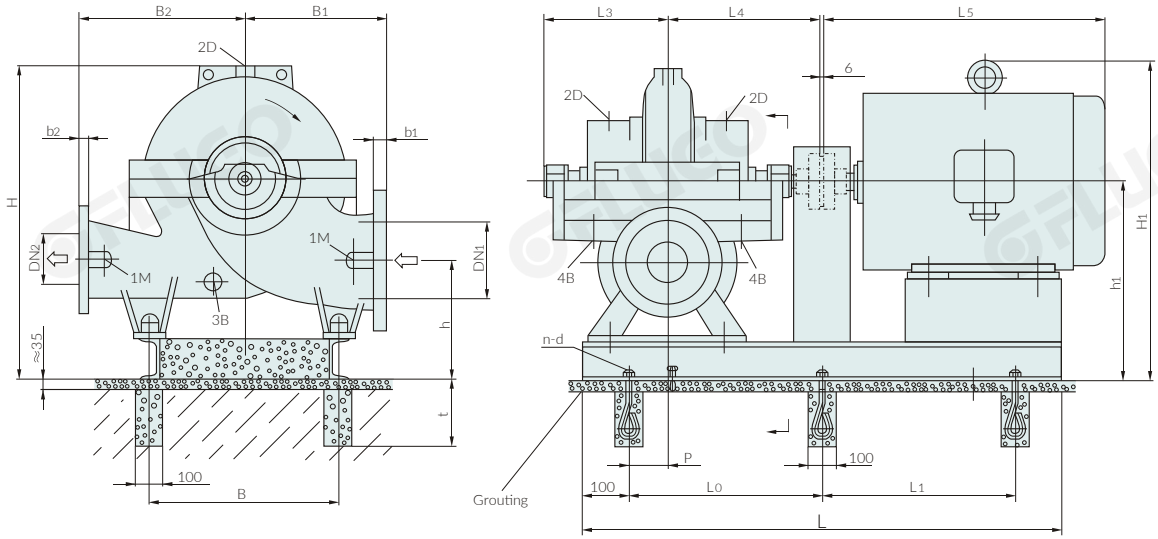

Connecting thread size

1M	piexometer	R1/2
2D	exhaust hole	R1/2
3B	drainage hole	R1/2
4B	drainage hole for leaked liquid	R3/4

EXTERNAL DIMENSION

Pump type	Flange dimension(mm)				Pump dimension(mm)					Weight(kg)	
	DN1	DN2	b1	b2	B1	B2	L4	H≤	L3	Pump	Water content
80-220	125	80	26	24	300	300	415	600	300	181	10
80-280										194	15
80-350					330	330				204	20

MOTOR DIMENSION-Y TYPE MOTOR

Motor pole	Pump type	Motor type	Motor power (kw)	B	h	h1	H1	L	L0	L1	t	P	L5	n-d	Motor weight (kg)	Foundation reference weight (kg)
4 (pole)	80-220	100L	2.2-3	340	295	435	580	880	340		350	70	380	6-M16 x 300	39	70
		112M	4				588	890	345				400		45	
	80-280	132S	5.5				618	930	365				475		72	80
		132M	7.5					970	385				515		84	
		160M	11				660	1050	425				605		130	
	80-350	160L	15					1100	450				650		145	
		180M	18.5					1110	455				670		180	110
		180L	22				660	1150	475				710		200	
2 (pole)	80-220	160L	18.5	340	295	435	660	1100	450		350	70	650	6-M16 x 300	150	70
		180M	22				685	1110	455				670		182	
		200L	30-37				710	1190	495			85	775		255	100
	80-280	225M	45	356	320	460	765	1230	515				815		308	
		250M	55	406			785	1320	560				930		403	110
		280S	75	457			820	1390	595				1000		544	140

FLUGO reserves the right to change the technical data and dimensions in order to update or improve its product without prior notice.

FAS type pump installation dimension

100-260 to 100-400 (See structural drawing 1, 3)installation dimension

Rotating direction:CW

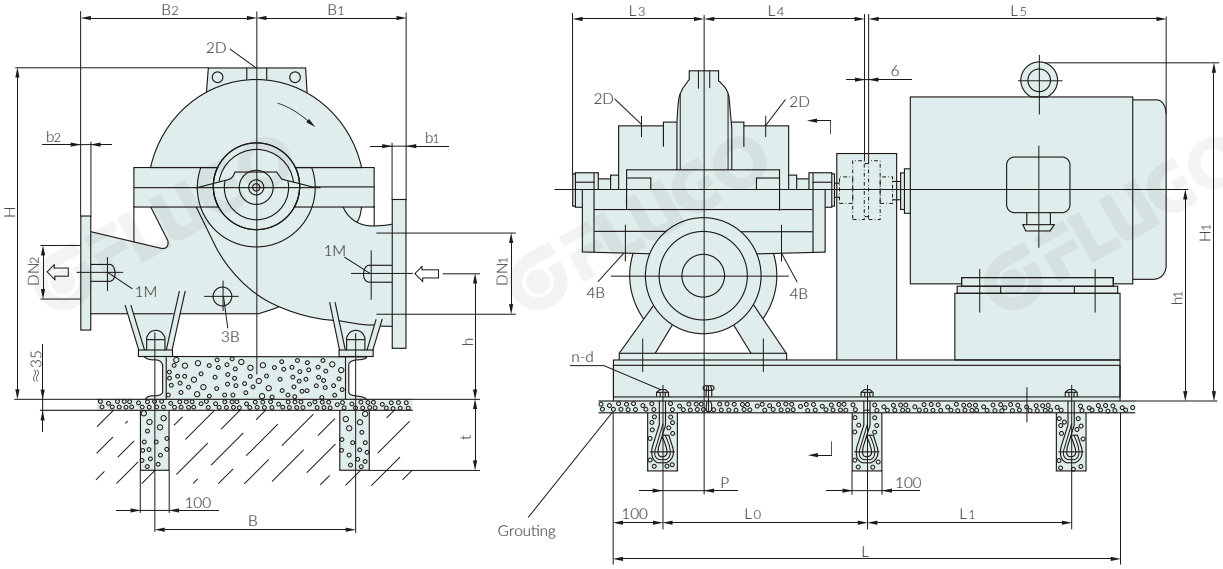

Connecting thread size

1M	piexometer	R1/2
2D	exhaust hole	R1/2
3B	drainage hole	R1/2
4B	drainage hole for leaked liquid	R3/4

EXTERNAL DIMENSION

Pump type	Flange dimension(mm)				Pump dimension(mm)					Weight(kg)	
	DN1	DN2	b1	b2	B1	B2	L4	H≤	L3	Pump	Water content
100-260	150	100	28	24	330	330	415	760	300	207	20
100-300										200	20
100-320										223	25
100-400					370	370				241	30

MOTOR DIMENSION-Y TYPE MOTOR

Motor pole	Pump type	Motor type	Motor power (kw)	B	h	h1	H1	L	L0	L1	t	P	L5	n-d	Motor weight (kg)	Foundation reference weight (kg)
4 (pole)	100-260	132S	5.5	400	305	475	658	930	365		350	70	475	6-M16 x 300	72	80
		132M	7.5					970	385				515		84	
	100-320	160M	11				700	1060	430				605		130	100
		160L	15					1100	450				650		145	
		180M	18.5				725	1100	450				670		180	110
		180L	22					1140	470				710		200	
	100-400	200L	30				750	1190	495				775		270	190
		225S	37				780	1220	510				820		284	
		225M	45					1240	520				845		320	
2 (pole)	100-260	200L	37	400	305	475	750	1190	495		350	70	775	6-M16 x 300	255	100
		225M	45				780	1210	505				815		308	
	100-300	250M	55	406	330	500	825	1320	560			85	930		403	110
		280S	75	457			860	1390	595				1000		544	140
		280M	90					1440	620				1050		620	
	100-320	315S	110	508			1050	1480	640				1240		980	190
		315M	132					1530	665				1310		1080	
		315L	160-200					1560	680						1220	

FAS type pump installation dimension

125-240 to 125-480 (See structural drawing 1, 3)installation dimension

Rotating direction:CW

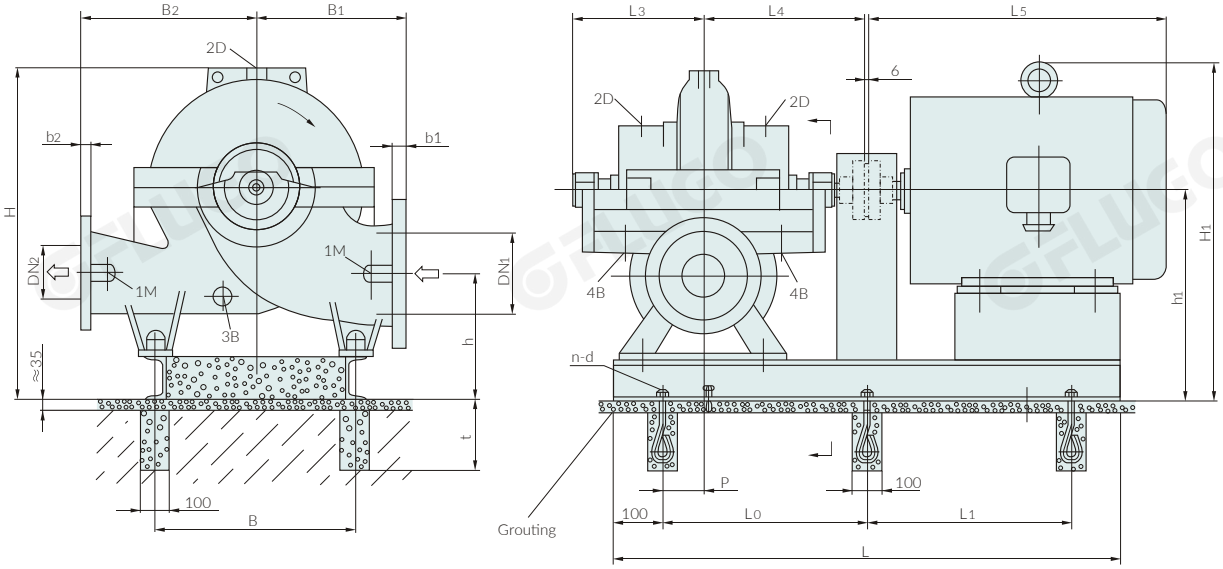

Connecting thread size

1M	piexometer	R1/2
2D	exhaust hole	R1/2
3B	drainage hole	R1/2
4B	drainage hole for leaked liquid	R3/4

EXTERNAL DIMENSION

Pump type	Flange dimension(mm)				Pump dimension(mm)					Weight(kg)	
	DN1	DN2	b1	b2	B1	B2	L4	H≤	L3	Pump	Water content
125-240	200	125	30	26	370	370	515	825	366	310	35
125-300										350	40
125-380										370	45
125-400				30						370	50
125-450			20	23.5	475	475	550	1090	405	480	55
125-480			30	26	450	450	515	825	366	500	55
125-570					600	500	590	1150	425	700	85

MOTOR DIMENSION-Y TYPE MOTOR

Motor pole	Pump type	Motor type	Motor power (kw)	B	h	h1	H1	L	L0	L1	t	P	L5	n-d	Motor weight (kg)	Foundation reference weight (kg)
4 (pole)	125-240	132M	7.5	450	320	520	703	1100	450		350	105	515	6-M16 x 300	84	80
	125-300	160M	11				745	1190	495				605		130	
		160L	15					1240	520				650		145	
		180M	18.5				770	1240	520				670		180	110
		180L	22					1280	540				710		200	
		200L	30				795	1320	560				775		270	
		225S	37			565	870	1350	575				820		284	190
	125-380 (h 1565)	225M	45					1380	590				845		320	
		250M	55				890	1440	620				930		427	250
		280S	75	457	345	590	950	1520	660				1000		562	
4 (pole)	125-480	225S	37	560	320	565	870	1350	575		350	105	820	6-M16 x 300	284	190
		225M	45					1380	590				845		320	
		250M	55				890	1440	620				930		427	250
		280S	75				925	1510	655				1000		562	
		280M	90					1560	680				1050		667	
		315S	110				1115	1630	715				1270		1000	410
2 (pole)	125-240	280S	75	457	345	545	905	1520	660		350	105	1000	6-M16 x 300	544	140
	125-300	280M	90					1580	690				1050		620	
		315S	110	508			1095	1620	710				1240		980	190
	125-450	315M	132					1670	735				1310		1080	
	125-570	315L	160-200					1700	750						1200	
	125-400	315L	160		370	590	1025	1710	730							

FLUGO reserves the right to change the technical data and dimensions in order to update or improve its product without prior notice.

FAS type conjunction flange dimension

150-280 to 150-570 (See structural drawing 1, 3)installation dimension

Rotating direction:CW

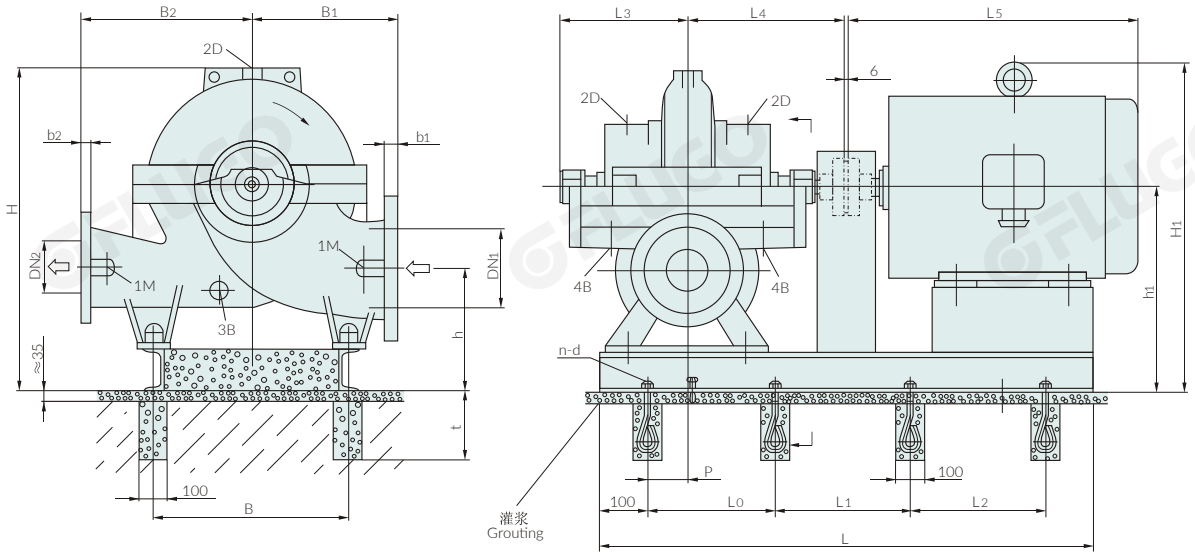

Connecting thread size

1M	piexometer	R1/2
2D	exhaust hole	R1/2
3B	drainage hole	R1/2
4B	drainage hole for leaked liquid	R3/4

EXTERNAL DIMENSION

Pump type	Flange dimension(mm)				Pump dimension(mm)					Weight(kg)	
	DN_1	DN_2	b_1	b_2	B_1	B_2	L_4	H≤	L_3	Pump	Water content
150-280	200	150	30	28	400	400	515	1050	366	347	50
150-310				26				950	380	450	65
150-450				28	450	450	590	1050	399	520	75
150-570					600	500				740	90

MOTOR DIMENSION-Y TYPE MOTOR

Motor pole	Pump type	Motor type	Motor power (kw)	B	h	h1	H1	L	L0	L1	L2	t	P	L5	n-d	Motor weight (kg)	Foundation reference weight (kg)
4 (pole)	150-280	180M	18.5	450	310	520	700	1240	520		-	350	105	670	6-M16 x 300	180	110
		180L	22					1280	540					710		200	
		200L	30				795	1320	560					775		270	190
	150-350	225S	37				825	1350	575					820		284	
		225M	45					1380	590					845		320	
		250M	55				845	1440	620					930		427	250
		280S	75	457	335	545	905	1520	660					1000		562	
4 (pole)	150-450	225M	45	560	320	565	870	1500	650		-	350	150	845	6-M16 x 300	320	190
		250M	55				990	1560	680					930		427	250
		280S	75				925	1630	715					1000		562	
		280M	90					1680	740					1050		667	
		315S	110				1115	1750	775					1270		1000	410
		315M	132					1800	800					1340		1100	
4 (pole)	150-570	315S	110	700	380	680	1230	1750	775		-	450	150	1270	6-M20 x 400	1000	
		315M	132					1800	800					1340		1100	
		315L	160-200					1855	815					1340		1240	
		355(6KV)	250				1105	2360	720	720				1820	8-M20 x 400	2160	440

FAS type pump installation dimension

200-340 to 200-660 (See structural drawing 1, 3)Installation dimension

Rotating direction:CW

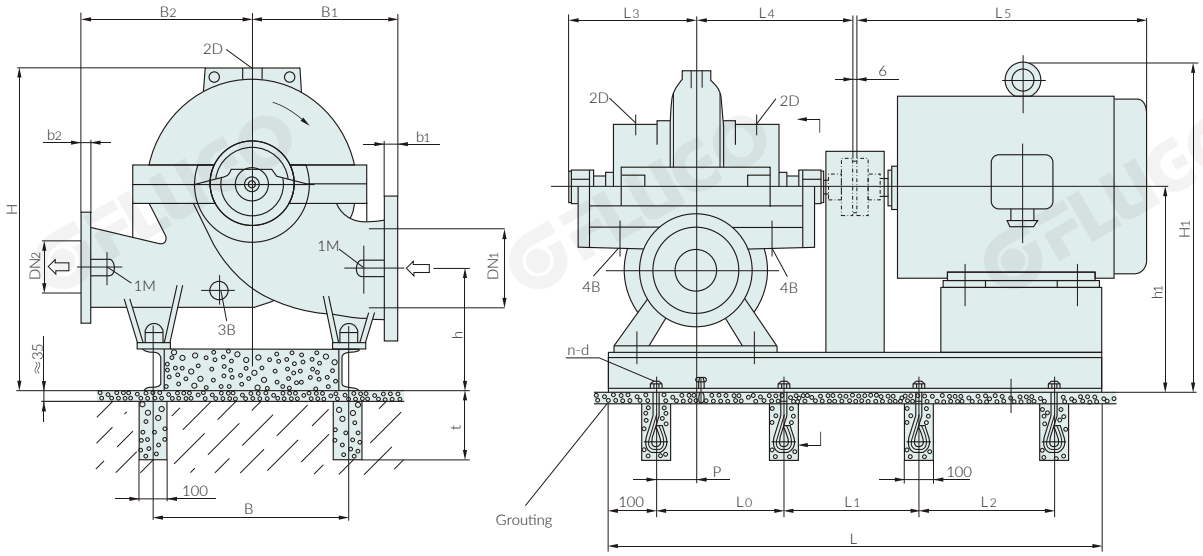

Connecting thread size

1M	piexometer	R1/2
2D	exhaust hole	R1/2
3B	drainage hole	R1/2
4B	drainage hole for leaked liquid	R3/4

EXTERNAL DIMENSION

Pump type	Flange dimension(mm)				Pump dimension(mm)					Weight(kg)	
	DN1	DN2	b1	b2	B1	B2	L4	H≤	L3	Pump	Water content
200-340	250	200	32	30	450	450	590	1240	399	590	80
200-410					500	500				620	95
200-530					600		655		464	840	115
200-660					650	550				1000	140
200-740					700	600		1420	500	1400	180

MOTOR DIMENSION-Y TYPE MOTOR

Motor pole	Pump type	Motor type	Motor power (kw)	B	h	h1	H1	L	L0	L1	L2	t	P	L5	n-d	Motor weight (kg)	Foundation reference weight (kg)
4 (pole)	200-340	225S	37	560	420	660	925	1470	635		-	350	150	820	6-M16 x 300	284	190
		225M	45					1500	650					845		320	
	200-410	250M	55				945	1560	680					930		427	250
		280S	75				980	1630	715					1000		562	
		280M	90					1680	740					1050		667	
		315S	110				1170	1750	775					1270		1000	410
		315M	132					1800	800					1340		1100	
4 (pole)	200-530	315S	110	700	440	740	1290	1810	805		-	450	150	1270	6-M20 x 400	1000	410
		315M	132					1860	830					1340		1100	
		315L	160-200					1890	845					1340		1240	
		355(6KV)	250				1165	2450	750		750			1820	8-M20 x 400	1840	440
		355(6KV)	280														
	200-660	315L	160-200	700	430	780	1330	1890	845		-	450	150	1340	6-M24 x 400	1240	410
		355(6KV)	250-315				1595	2450	750		750			1820	8-M24 x 400	2160	410
		400(6KV)	355-450	710	460	810	1740	2570	790		790			1980		2980	440
4 (pole)	200-740	450(6KV)	560	800	460	905	1200	3000	940		940			2100		3300	480

FLUGO reserves the right to change the technical data and dimensions in order to update or improve its product without prior notice.

FAS type pump installation dimension

250-390 to 250-610 (see structural drawing) Installation dimension

Rotating direction:CW

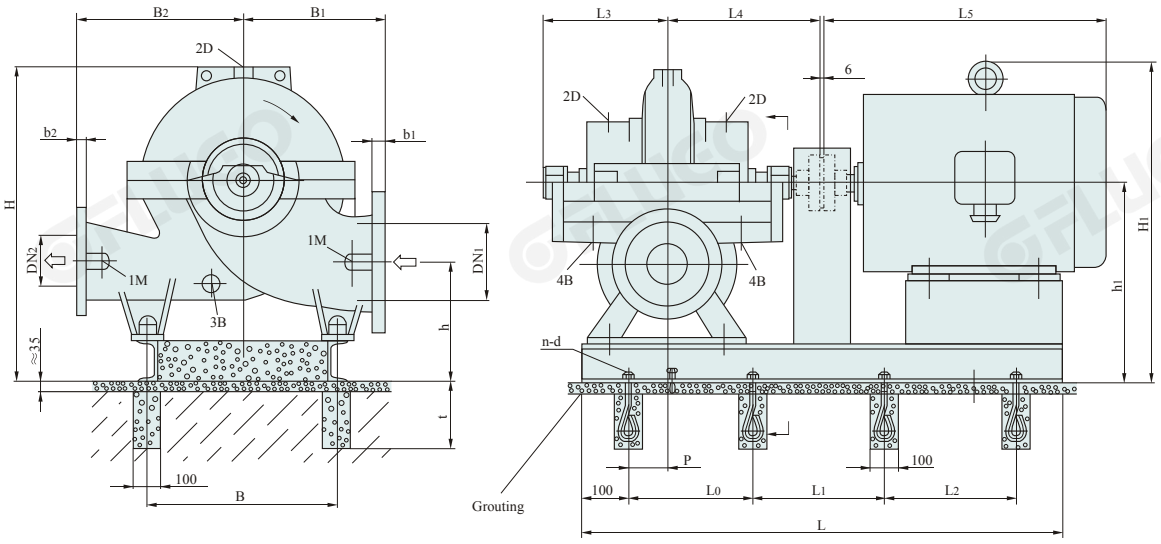

Connecting thread size

1M	piexometer	R1/2
2D	exhaust hole	R1/2
3B	drainage hole	R1/2
4B	drainage hole for leaked liquid	R3/4

EXTERNAL DIMENSION

Pump type	Flange dimension(mm)				Pump dimension(mm)					Weight(kg)	
	DN1	DN2	b1	b2	B1	B2	L4	H≤	L3	Pump	Water content
250-390	300	250	36	32	500	500	655	1275	464	810	125
250-470					550	550	730		515	930	145
250-600	350		42		650	550	839	1450	660	1400	180
250-550					650	550	655	1275	495	1000	150
250-820					700	650	810	1500	621	2000	200

MOTOR DIMENSION-Y TYPE MOTOR

Motor pole	Pump type	Motor type	Motor power (kw)	B	h	h1	H1	L	L0	L1	L2	t	P	L5	n-d	Motor weight (kg)	Foundation reference weight (kg)
4(pole)	250-390	280S	75	700	480	780	1140	1690	745		-	450	150	1000	6-M20 x 400	562	250
		280M	90					1750	775					1050		667	
		315S	110				1330	1810	805					1270		1000	410
		315M	132					1860	830					1340		1100	
		315L	160					1890	845					1340		1240	
4(pole)	250-470	315S	110	700	500	800	1350	1950	875		-	450	210	1270	6-M20 x 400	1000	250
		315M	132					2000	900					1340		1100	410
		315L	160-200					2030	915					1340		1240	
		355(6KV)	200-280				1225	2570	790	790				1620	8-M20 x 400	2160	440

FAS type pump installation dimension

300-330 to 300-550 (see structural drawing 1,3) 300-710 (see structural drawing 2,4)

Rotating direction:CW

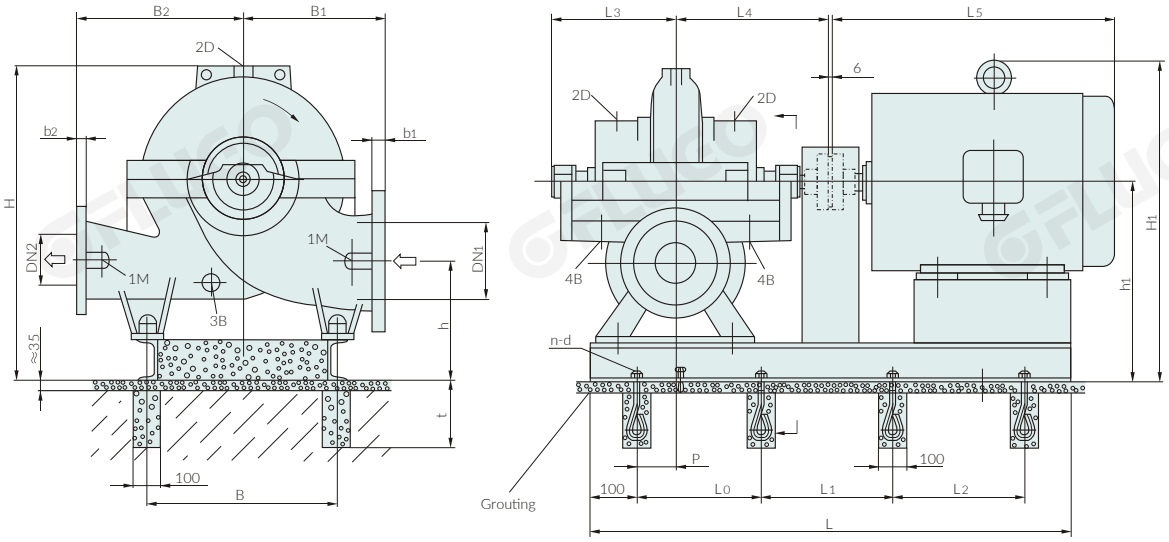

Connecting thread size

1M	piexometer	R1/2
2D	exhaust hole	R1/2
3B	drainage hole	R1/2
4B	drainage hole for leaked liquid	R3/4

EXTERNAL DIMENSION

Pump type	Flange dimension(mm)				Pump dimension(mm)					Weight(kg)	
	DN1	DN2	b1	b2	B1	B2	L4	H≤	L3	Pump	Water content
300-330	350	300	40	36	550	500	655	1430	464	900	100
300-450	400	300	44	36	650	550	730	1430	515	1400	190
300-550	400	300	44	36	700	650	810	1430	585	2097	225
300-710	400	300	48	40	750	650	935	1430	748	2600	275

MOTOR DIMENSION-Y TYPE MOTOR

Motor pole	Pump type	Motor type	Motor power (kw)	B	h	h 1	H1	L	L 0	L1	L2	t	P	L 5	n-d	Motor weight (kg)	Foundation reference weight (kg)
4 (pole)	300-330	225S	37	700	510	810	1115	1540	670		-	450	150	820	6-M20 x 400	284	190
		225M	45				1115	1560	680					845		320	
		250M	55				1135	1620	710					930		427	250
		280S	75				1170	1690	745					1000		562	
		280M	90				1170	1750	775					1050		667	
		315S	110				1360	1810	805					1270		1000	
4 (pole)	300-450	315L	160-200	700	520	870	1420	2030	915		-	450	210	1340		1240	410
		355(6KV)	250-315				1295	2570	790		790			1820	8-M20 x 400	2160	440
4 (pole)	300-550	355(6KV)	250-280	950	498	870	1747	2660	820		820	450	210	1820	8-M24 x 400	2160	440
		400(6KV)	355-560		438		1862	2780	860		860			1940		2620	480
4 (pole)	300-710	400(6KV)	400-560	950	550	950	1385	3080	960		960	450	230	1940	8-M24 x 400	2620	480
		450(6KV)	630-900				1435	3200	1000		1000			2080		3850	
		500(6KV)	1120				1490	3380	1040		1040			2550		4420	520

FLUGO reserves the right to change the technical data and dimensions in order to update or improve its product without prior notice.

FAS type conjunction flange dimension

350-380 to 350-520 (see structural drawing 1, 3)
350-640 to 350-800 (see structural drawing 2, 4)

Rotating direction:CW

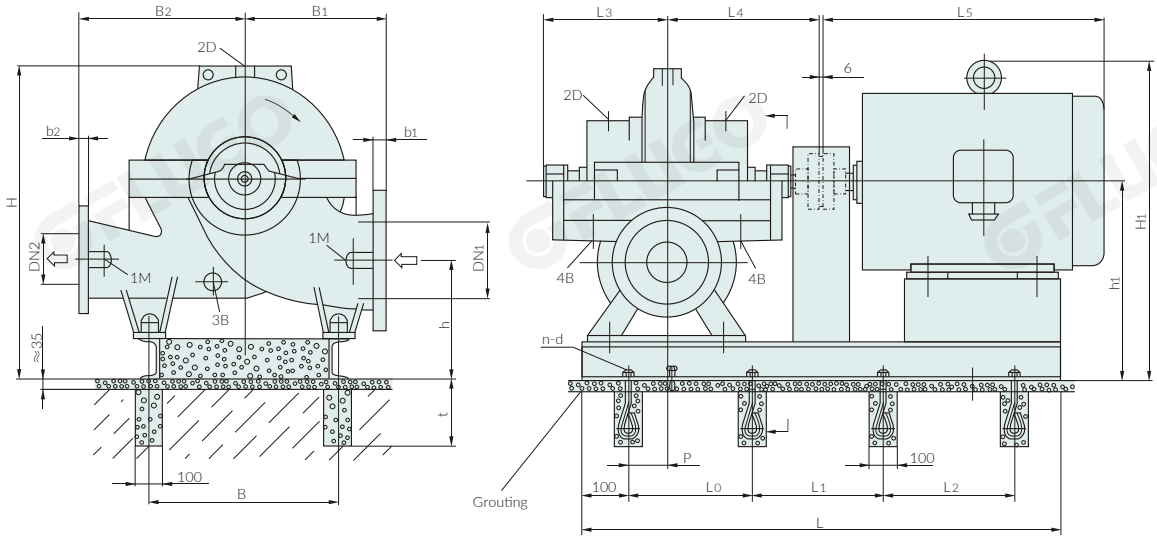

Connecting thread size

1M	piexometer	R1/2
2D	exhaust hole	R1/2
3B	drainage hole	R1/2
4B	drainage hole for leaked liquid	R3/4

EXTERNAL DIMENSION

Pump type	Flange dimension(mm)				Pump dimension(mm)					Weight(kg)	
	DN1	DN2	b1	b2	B1	B2	L4	H≤	L3	Pump	Water content
350-380	400	350	44	40	650	550	730	1415	515	1200	160
350-440	450				750	650	810		585	1450	240
350-520					700					1800	290
350-610	500		42	36	740	670	890		700	2500	400
350-640	450		44	40			910	1550	710	2570	324
350-800	450				800	800	1020	1830	760	3000	350

MOTOR DIMENSION-Y TYPE MOTOR

Motor pole	Pump type	Motor type	Motor power (kw)	B	h	h1	H1	L	L0	L1	L2	t	P	L5	n-d	Motor weight (kg)	Foundation reference weight (kg)
4 (pole)	350-380	280M	90	700	520	870	1230	1880	840		-	450	210	1050	6-M20 x 400	667	250
		315S	110				1420	1950	875					1270		1000	410
		315M	132					2000	900					1340		1100	
		315L	160-200					2030	915					1340		1240	
4 (pole)	350-640 h 530 h1980 / 350-520 / 350-440	315L	200	950	550	950	1500	2110	955	-		450	210	1340	6-M24 x 400	1240	410
		355(6KV)	250-315				1375	2660	820	820				1820	8-M24 x 400	2160	440
		400(6KV)	355-560				1385	2780	860	860				1940		2620	480
		450(6KV)	630-900				1435	2900	900	900				2080		3300	
		500(6KV)	1000				1540	3365	1055	1055				2550		4070	560
4 (pole)	350-800	560(6KV)	1800	950	700	1210	1900	3880	895	895		450	260	2900	10-M24 x 400	6580	700

FAS type pump installation dimension (no foundation)

400-550 (see structural drawing 1, 3) 400-600 (see structural drawing 2, 4) Installation dimension

Rotating direction:CW

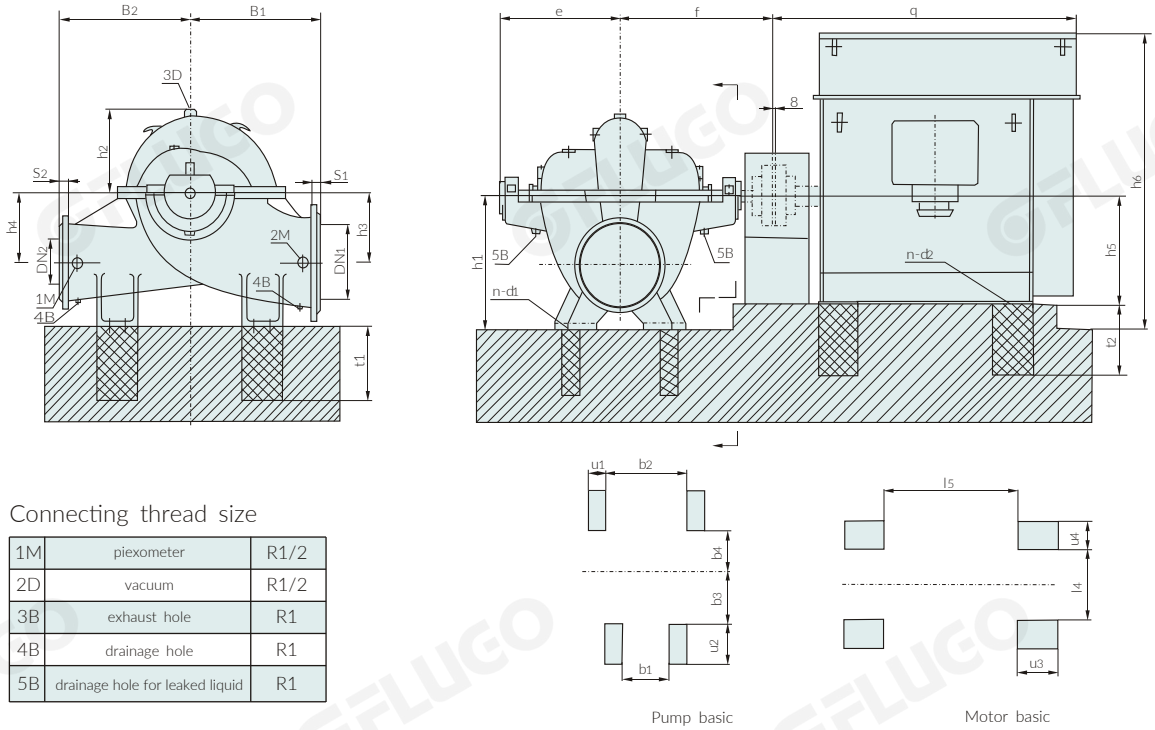

Connecting thread size

1M	piexometer	R1/2
2D	vacuum	R1/2
3B	exhaust hole	R1
4B	drainage hole	R1
5B	drainage hole for leaked liquid	R1

Pump basic

Motor basic

EXTERNAL DIMENSION

Pump type	Flange dimension(mm)				Pump dimension(mm)													Pump Weight (kg)
	DN 1	DN 2	S 1	S 2	B 1	B 2	e	f	h1	h2	h3	h4	b1	b2	b3	b4	n-d 1	
400-550	500	400	42	38	800	750	585	810	900	500	425	500	400	400	250	250	4-35	2400
400-600							793	980		557							4-42	3200
400-660	600		48	48	850		670	960	950	560	500		315	315				

MOTOR DIMENSION-Y TYPE MOTOR

Motor pole	Pump type		Motor type	Motor power (kw)	l4	l5	h5	h6	u1	u2	u3	u4	t1	t2	n-d 2	q	Motor weight (kg)
4 (pole)		400-550	400(6KV)	315	580	435	400	1435	130	300	565	130	850	850	4-35	1828	2380
			400(6KV)	400													2590
			400(6KV)	450													3100
			450(6KV)	500	650	520	450	1585			600	150				2128	3300
			450(6KV)	560													3500
			450(6KV)	630													3700
		400-600	500(6KV)	710		595	500	1640			655			850	4-42	2558	3880
			500(6KV)	800													4020
			500(6KV)	900													4170
			500(6KV)	1000													4340
			560(6KV)	1120	830	710	560	1700			690	170				2775	4850
			560(6KV)	1250													5100

FLUGO reserves the right to change the technical data and dimensions in order to update or improve its product without prior notice.

FAS type pump installation dimension (no foundation)

500-520 to 500-1050 (see structural drawing 2, 4) installation dimension

Rotating direction:CW

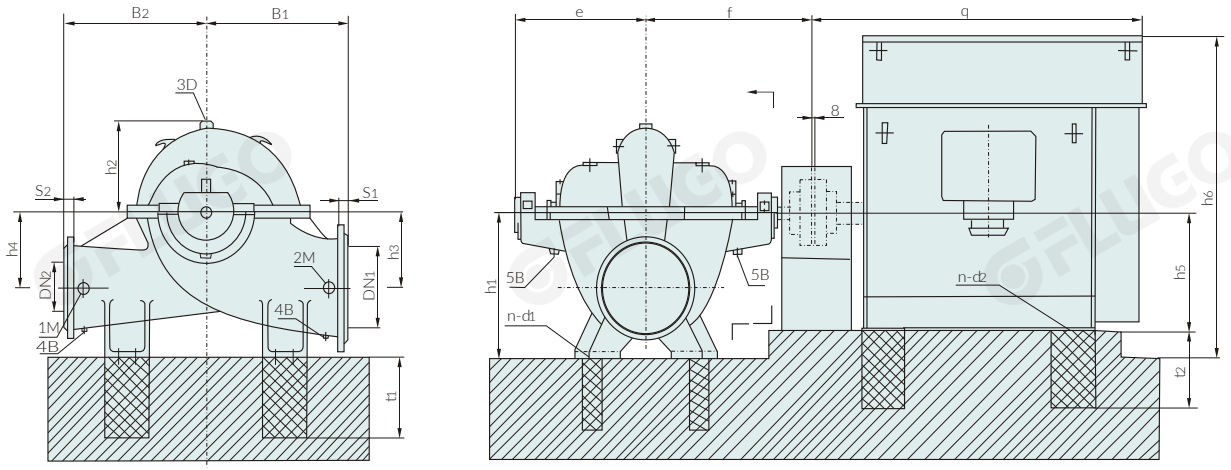

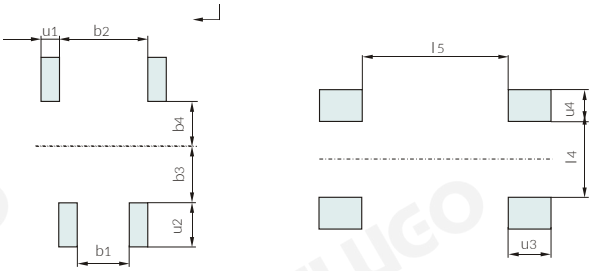

Pump basic

Motor basic

Connecting thread size

1M	piexometer	R 1/2
2M	vacuum	R 1/2
3D	exhaust hole	R 1
4B	drainage hole	R 1
5B	drainage hole for leaked liquid	R 1

EXTERNAL DIMENSION

Pump type	Flange dimension(mm)				Pump dimension(mm)													Pump Weight (kg)
	DN1	DN2	S1	S2	B1	B2	e	f	h1	h2	h3	h4	b1	b2	b3	b4	n-d1	
500-520	600	500	48	42	850	750	845	1025	900	550	475	475	700	1000	250	290	4-30	3200
500-650					950	800	910	1095	980	640	495	495			300	340	4-35	4500
500-710					1050	850	860	1085	1000	580	550	620			390	490	4-42	5240
500-770			36	37	900	800	1210.5	930	1050	600	600	600	620	820	300	350		4000
500-800			48	42	1000	900	946	1210	1050	610	600	600	700	1000	440	540		4900
500-860					1050	950	946	1210	1100	660	650	650	750		490	590		5000
500-1050	700	500	54	52	1130	1050	970	1270	1180	870	700	700	780	780	325	475	8-42	6300
500-1060																		6500

MOTOR DIMENSION-YTYPE MOTOR

Motor pole	Pump type	Motor type	Motor power (kw)	l4	l5	h5	h6	u1	u2	u3	u4	t1	t2	n-d2	Q	Motor weight(kg)
6 (pole)	500-520	315L	132	268	288	315	1450	130	300	220	240	650	650	4-28	1340	1210
		355M	160-200	370	310	355				250					1828	1750
		355(6KV)	220	500	335		1345			565	130					2180
		355(6KV)	250													2290
	500-650	400(6KV)	280	580	435	400	1435						850	4-35	1948	2290
		400(6KV)	315													2380
		400(6KV)	355									850				2490
		400(6KV)	400													2590
	500-710	450(6KV)	450	650	520	450	1585			600	150				2128	3100
		450(6KV)	500													3300
		450(6KV)	560													3500
		450(6KV)	630													3700
	500-800	500(6KV)	710	750	595	500	1640			655		850	850	4-42	2558	3880
		500(6KV)	800													4020
		500(6KV)	900													4170
		500(6KV)	1000													4340
	500-860	560(6KV)	1120	830	710	560	1700			690	170				2775	4850
		560(6KV)	1250													5200
		560(6KV)	1400													5350
		630(6KV)	1600	930	830	630	1770			770	190			4-48	3038	6300

FAS type pump installation dimension (no foundation)

600-560 to 600-860 (see structural drawing 2, 4) installation dimension

Rotating direction:CW

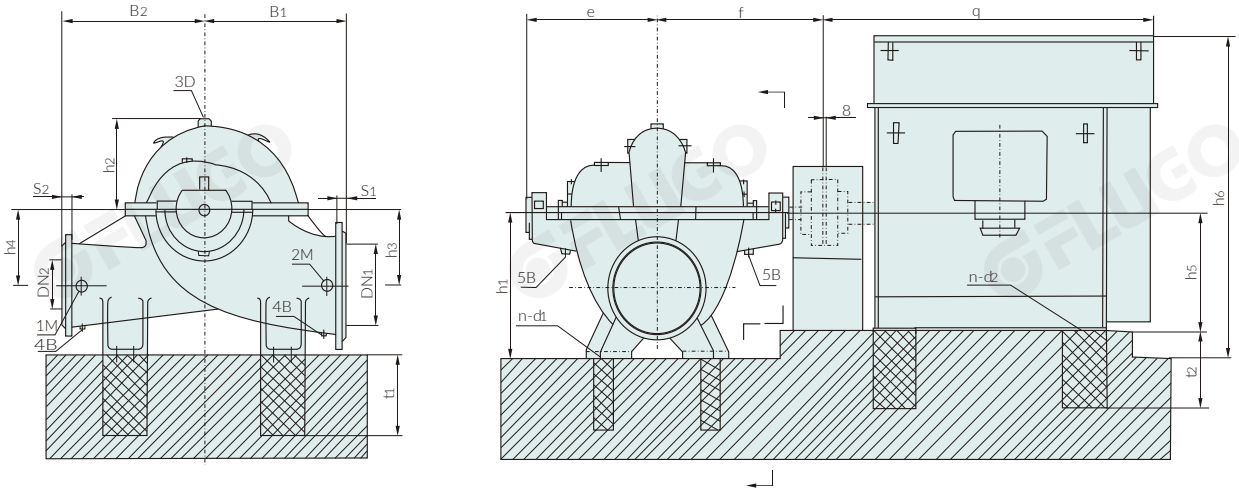

Connecting thread size

1M	piexometer	R1/2
2D	vacuum	R1/2
3B	exhaust hole	R1
4B	drainage hole	R1
5B	drainage hole for leaked liquid	R1

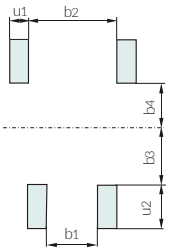

Pump basic

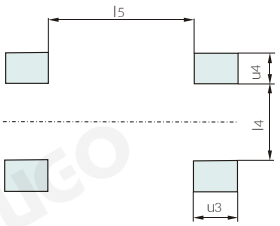

Motor basic

EXTERNAL DIMENSION

Pump type	Flange dimension(mm)				Pump dimension(mm)													Pump Weight (kg)
	DN1	DN2	S1	S2	B1	B2	e	f	h1	h2	h3	h4	b1	b2	b3	b4	n-d1	
600-560	700	600	54	48	1100	900	893	1080	1100	645	610	610	650	950	400	500	4-35	4500
600-630					1000	1000	878.5	1060	1050	640	545	545			500			4700
600-720						1100	935	1160		612			750	1050			4-40	4800
600-740					900	1000	871	1100	1100	763	580	580	770	770	300	300	4-56	4320
600-860					1100	1200	1011	1275	1100	705	580	580	750	1050	600	500	4-55	5300
600-900	800	600	44	48	1200	1000	1011	1270	1250	760	670	670	850	850	450	550	4-65	5800

MOTOR DIMENSION-Y TYPE MOTOR

Motor pole	Pump type	Motor type	Motor power (kw)	l4	l5	h5	h6	u1	u2	u3	u4	t4	t2	n-d 2	q	Motor weight (kg)
6极(pole)	600-560	355M	160	370	340	355	1650	150	300	220	240	650	650	4-28	1430	1620
		355M	200													1750
		355(6KV)	220	500	335		1345			565	130				1828	2180
		355(6KV)	250													2290
	600-630	400(6KV)	280	580	435	400	1435						850	4-35	1948	2290
		400(6KV)	315													2380
		400(6KV)	355													2490
		400(6KV)	400													2590
	600-720	450(6KV)	450	650	520	450	1585			600	150	850			2128	3100
		450(6KV)	500													3300
		450(6KV)	560													3500
		450(6KV)	630													3700
	600-860	500(6KV)	710	750	595	500	1640			655		850	850	4-42	2558	3880
		500(6KV)	800													4020
		500(6KV)	900													4170
		500(6KV)	1000													4340
		560(6KV)	1120	830	710	560	1700			690	170				2775	4850
		560(6KV)	1400													5350
		630(6KV)	1600	930	830	630	1770			770	190			4-48	3038	6300

FLUGO reserves the right to change the technical data and dimensions in order to update or improve its product without prior notice.

FAS type conjunction flange dimension (no foundation)

700-580 to 700-830 (see structural drawing 2, 4) installation dimension

Rotating direction:CW

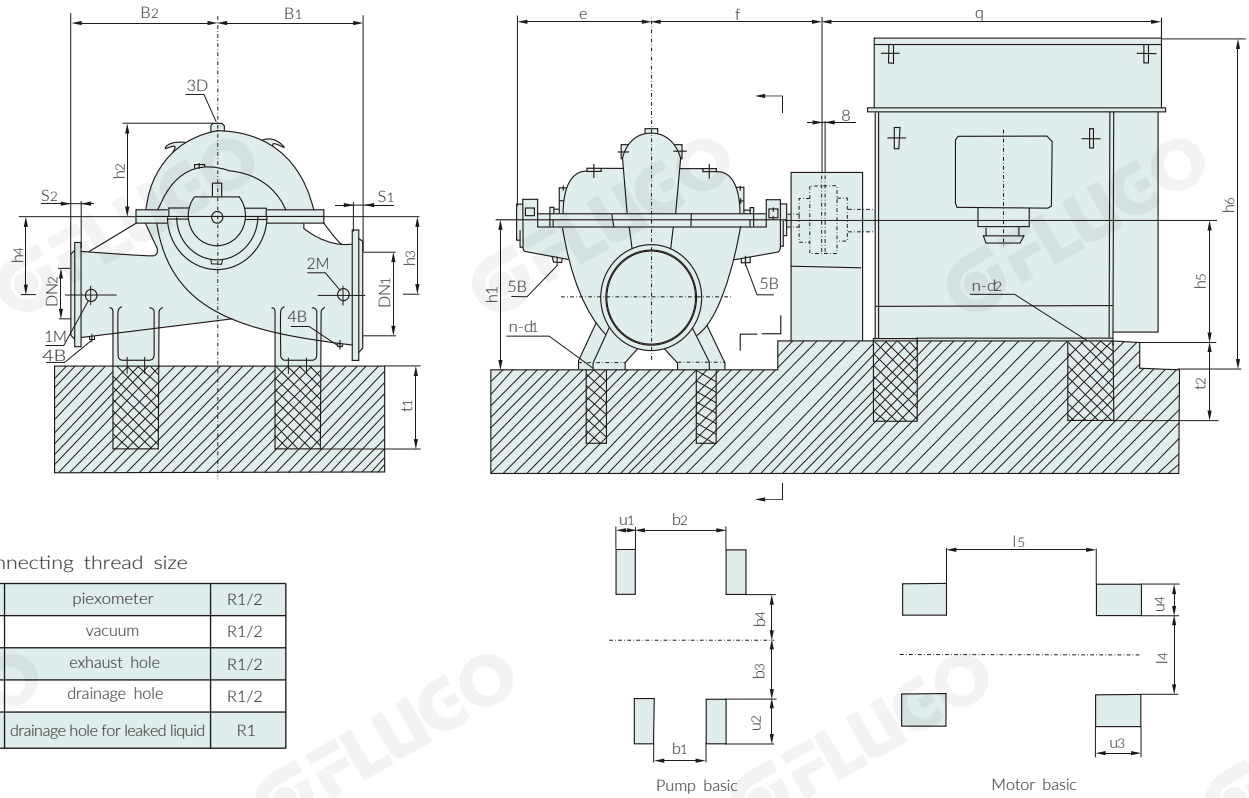

Connecting thread size

1M	piexometer	R1/2
2M	vacuum	R1/2
3D	exhaust hole	R1/2
4B	drainage hole	R1/2
5B	drainage hole for leaked liquid	R1

Pump basic

Motor basic

EXTERNAL DIMENSION

Pump type	Flange dimension(mm)				Pump dimension(mm)													Pump Weight (kg)
	DN1	DN2	S1	S2	B1	B2	e	f	h1	h2	h3	h4	b1	b2	b3	b4	n-d1	
700-500	700	700	40	40	1200	700	800	990	1150	700	620	620	670	970	575	225	4-42	4800
700-580	800	700	58	54	1300	800	1119	1300	1150	755	600	600	640	940	250	550		5100
700-700					1200	1150	1135	1360	1170	692	620	620	1080	1630	550			6500
700-830						1150	1176	1440	1200	730	630	630	640	940	600	600		6700

MOTOR DIMENSION-Y TYPE MOTOR

Motor pole	Pump type	Motor type	Motor power (kw)	l4	l5	h5	h6	u1	u2	u3	u4	t1	t2	n-d2	q	Motor weight (kg)
6 (pole)	700-580	400(6KV)	315	580	435	400	1435	150	350	565	130	850	850	4-35	1828	2380
		400(6KV)	355													2490
		400(6KV)	400													2590
	700-700	450(6KV)	500	650	520	450	1585			600	150				2128	3300
		450(6KV)	560													3500
		450(6KV)	630													3700
		500(6KV)	710	750	595	500	1640			655				4-42	2558	3880
		500(6KV)	800													4020
		500(6KV)	900													4170
		500(6KV)	1000													4340
	700-830	560(6KV)	1120	830	710	560	1706			690	170				2775	4850
		560(6KV)	1400													5100
		630(6KV)	1600	930	830	630	1770			770	190		1050	4-48	3038	6300
		630(6KV)	2000													6950

FAS type pump installation dimension

800-700 to 800-980 (see structural drawing 2, 4) installation dimension

Rotating direction:CW

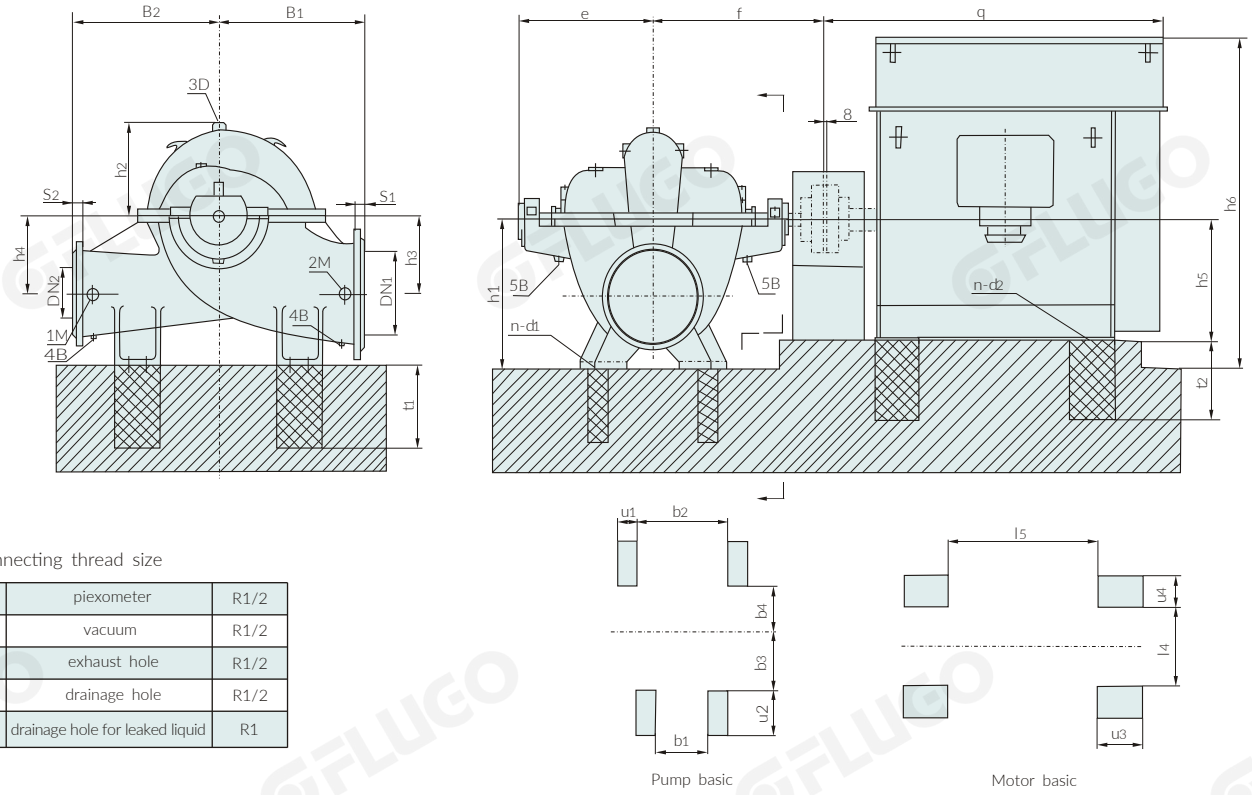

Pump basic

Motor basic

Connecting thread size

1M	piexometer	R1/2
2M	vacuum	R1/2
3D	exhaust hole	R1/2
4B	drainage hole	R1/2
5B	drainage hole for leaked liquid	R1

EXTERNAL DIMENSION

Pump type	Flange dimension(mm)				Pump dimension(mm)													Pump Weight (kg)
	DN1	DN2	S1	S2	B1	B2	e	f	h1	h2	h3	h4	b1	b2	b3	b4	n-d1	
800-770	900	800	62	58	1400	950	1185	1410	1380	765	770	770	740	1040	350	500	4-42	7800
800-880						1125	1236	1500	1360	900					500	550	4-55	8300
800-980						1300	1300	1580	1370	920	760	760			600	600		9130

MOTOR DIMENSION-Y TYPE MOTOR

Motor pole	Pump type	Motor type	Motor power (kw)	l4	l5	h5	h6	u1	u2	u3	u4	t1	t2	n-d2	q	Motor weight (kg)
8 (pole)	800-770	450(6KV)	400	650	520	450	1585	150	400	600	150	1050	850	4-35	2128	3180
		450(6KV)	450													3300
		500(6KV)	500	750	595	500	1640			655			1050	4-42	2558	4020
		500(6KV)	560													4170
		500(6KV)	630													4340
		500(6KV)	710													4480
	800-880	560(6KV)	800	830	710	560	1700			690	170				2775	5100
		560(6KV)	900													5320
		560(6KV)	1000													5550
	800-980	630(6KV)	1120	930	830	630	1770			770	190			4-48	3038	6660
		630(6KV)	1250													6980
		630(6KV)	1400													7300
		630(6KV)	1600													7580
		-	1800	-	-	-	-			-	-		-	-	-	-
		-	2000													

FLUGO reserves the right to change the technical data and dimensions in order to update or improve its product without prior notice.

FAS type pump installation dimension

80-220 to 80-350 (see structural drawing 5) Installation dimension

Rotating direction:CW

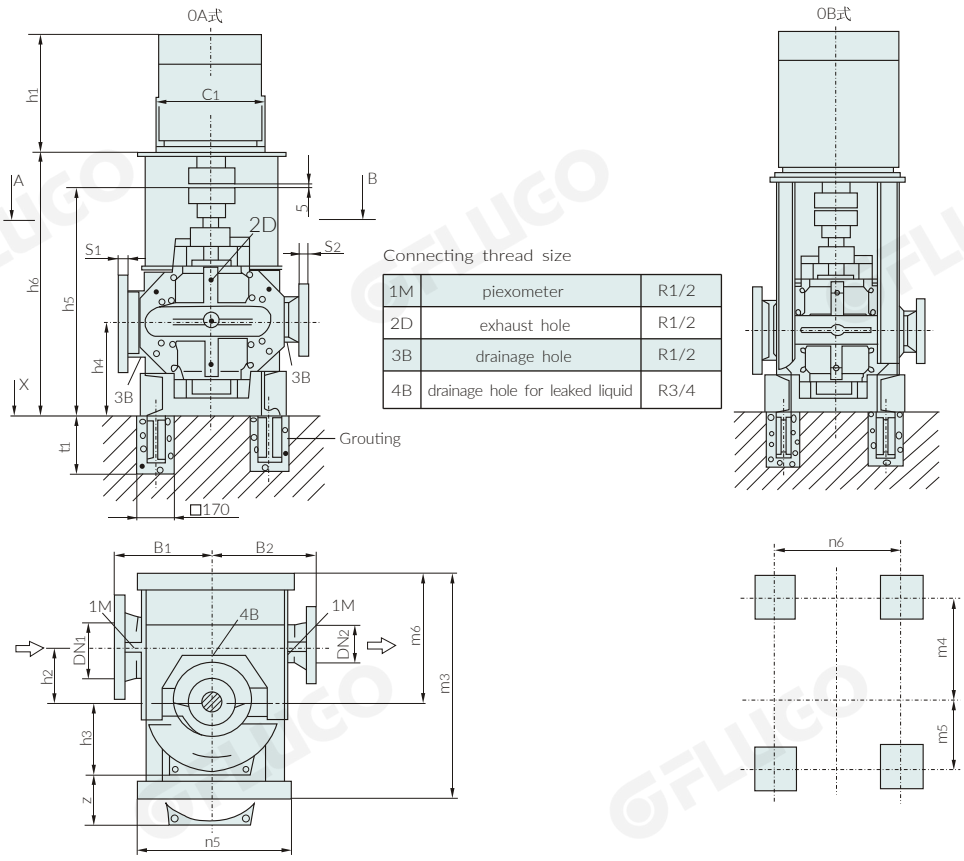

Connecting thread size

1M	piexometer	R1/2
2D	exhaust hole	R1/2
3B	drainage hole	R1/2
4B	drainage hole for leaked liquid	R3/4

EXTERNAL DIMENSION

Pump type	Flange dimension(mm)				Pump dimension(mm)							Weight (kg)	
	DN1	DN2	S1	S2	B1	B2	h2	h3	h4	h5	z	Pump	Water content
80-220	125	80	26	24	300	300	140	168	320	735	340	181	10
80-280								190			380	194	15
80-350					330	330		225			450	204	20

MOTOR DIMENSION-Y TYPE MOTOR

Pump type	Structure model		Motor type	Motor power (kw)	c1	h6	h1	m3	m4	m5	m6	n5	n6	Motor weight (kg)
	OA	OB												
80-220	●	—	min.100L	2.2	200	790	295	640	275	100	380	450	340	28
			max.200L	30	400	850	740							255
	—	●	min.225M	45	450		795	720				710		308
			max.225M	45										308
80-280	●	—	min.100L	3	250	800	320	640				450		39
			max.200L	30	400	850	740							255
	—	●	min.225M	45	450		795	720				710		308
			max.280S	75	550	880	1030							620
80-350	●	—	min.132M	7.5	300	820	395	640				450		72
			max.180L	22	350	850	660							200

Z=required size of dismantling rotor

FAS type pump installation dimension

100-260 to 100-400 (see structural drawing 5) Installation dimension

Rotating direction:CW

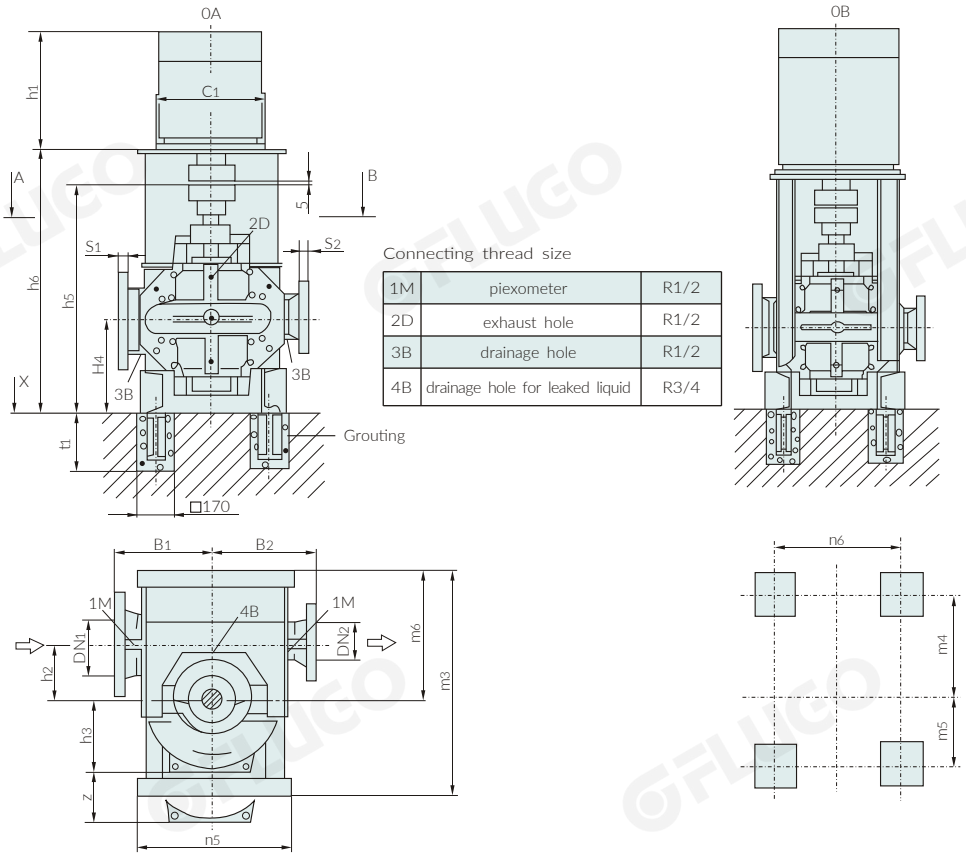

Connecting thread size

1M	piexometer	R1/2
2D	exhaust hole	R1/2
3B	drainage hole	R1/2
4B	drainage hole for leaked liquid	R3/4

EXTERNAL DIMENSION

Pump type	Flange dimension(mm)				Pump dimension(mm)							Weight (kg)	
	DN1	DN2	S1	S2	B1	B2	h2	h3	h4	h5	z	Pump	Water content
100-260	150	100	28	24	330	330	170	195	300	715	390	207	20
100-320								225			450	223	25
100-400					370	370		260			520	241	30

MOTOR DIMENSION-Y TYPE MOTOR

Pump type	Structure model		Motor type	Motor power (kw)	c1	h6	h1	m3	m4	m5	m6	n5	n6	Motor weight (kg)
	OA	OB												
100-260	●	—	min.100L	3	250	780	320	695	315	115	420	500	400	39
			max.225M	45	450	830	795							308
	—	●	min.250M	55	550	860	895	760				810		403
			max.315S	110	660		1220							980
100-320	●	—	min.132M	7.5	300	800	435	695				500		84
			max.225M	45	450	830	795							308
	—	●	min.250M	55	550	860	895	760				810		403
			max.315L	200	660		1320							1220
100-400	●	—	min.160M	11	350	830	495	695				500		130
			max.225M	45	450	860	795							420
	—	●	min.250M	55	550		895	760				810		427
			max.250M	55	550									

Z=required size of dismantling rotor

FLUGO reserves the right to change the technical data and dimensions in order to update or improve its product without prior notice.

FAS type conjunction flange dimension

125-240 to 125-480 (see structural drawing 5) Installation dimension

Rotating direction:CW

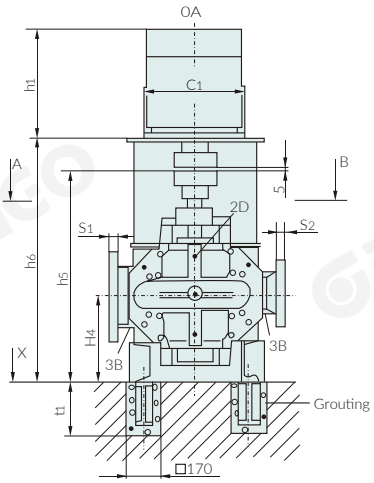

Connecting thread size

1M	piexometer	R1/2
2D	exhaust hole	R1/2
3B	drainage hole	R1/2
4B	drainage hole for leaked liquid	R3/4

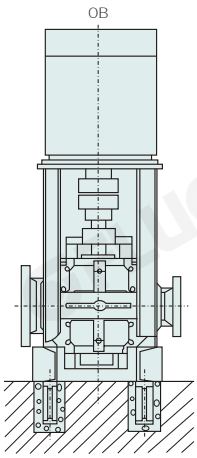

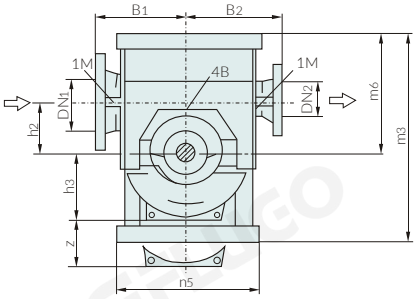

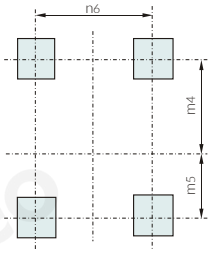

EXTERNAL DIMENSION

Pump type	Flange dimension(mm)				Pump dimension(mm)							Weight (kg)	
	DN1	DN2	S1	S2	B1	B2	h2	h3	h4	h5	z	Pump	Water content
125-240	200	125	30	26	370	370	200	210	355	870	420	310	35
125-300								230			460	350	40
125-380								260			520	370	45
125-480					450	450		305			610	500	55

MOTOR DIMENSION-Y TYPE MOTOR

Pump type	Structure model		Motor type	Motor power (kw)	c1	h6	h1	m3	m4	m5	m6	n5	n6	Motor weight (kg)
	OA	OB												
125-240	●	—	min.132S	5.5	300	955	395	855	360	210	475	600	450	72
			max.280M	55	550	1015	1030							620
	—	●	min315S	110	660		1220					860		980
			max.315M	132			1320							1080
125-300	●	—	min.132M	7.5	300	955	435					600		84
			max.280M	90	550	1015	1030							620
	—	●	min.315S	110	660		1220					860		980
			max.315L	200			1320							1220
125-380	●	—	min.160L	15	350	985	540					600		145
			max.280S	75	550	1015	980							562
125-480	—	●	min.200L	30	400	985	740					700	560	270
			max.315M	132	660	1045	1320							1100

Z=required size of dismantling rotor

FAS type pump installation dimension

150-280 to 150-570 (see structural drawing 5) Installation dimension

Rotating direction:CW

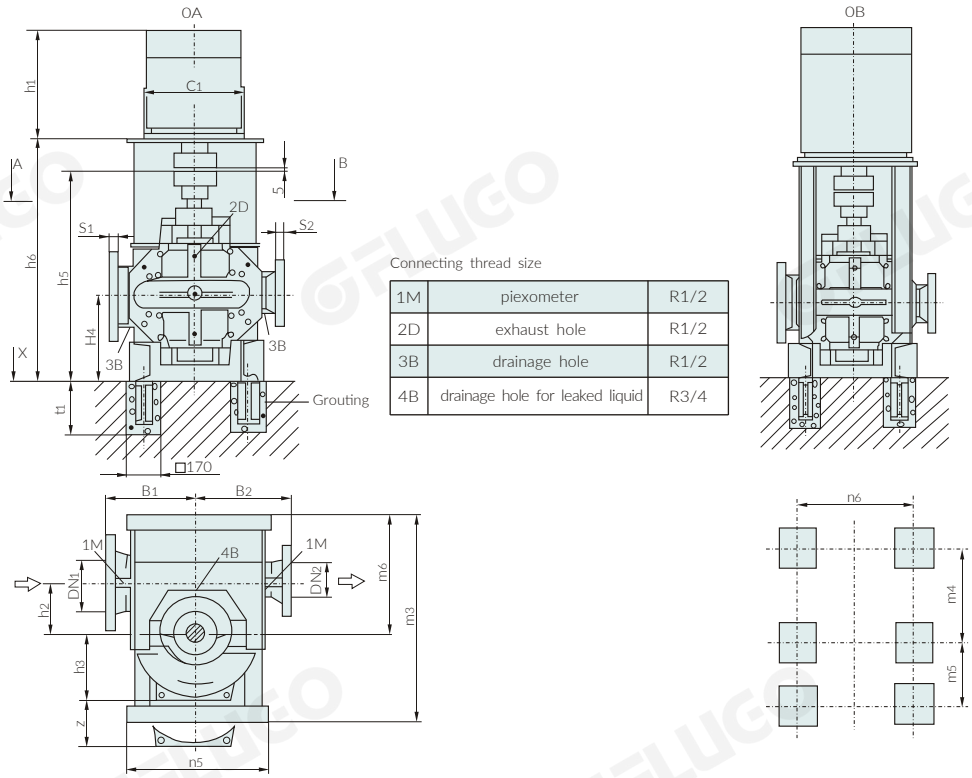

Connecting thread size

1M	piexometer	R1/2
2D	exhaust hole	R1/2
3B	drainage hole	R1/2
4B	drainage hole for leaked liquid	R3/4

EXTERNAL DIMENSION

Pump type	Flange dimension(mm)				Pump dimension(mm)							Weight (kg)	
	DN1	DN2	S1	S2	B1	B2	h2	h3	h4	h5	z 2)	Pump	Water content
150-280	200	150	30	28	400	400	200	245	355	870	490	347	50
150-350								265			530	410	60
150-450					450	450	245	305	400	990	610	520	75
150-570					600	500	300	370			740	740	90

MOTOR DIMENSION-Y TYPE MOTOR

Pump type	Structure model		Motor type	Motor power (kw)	c1	h6	h1	m3	m4	m5	m6	n5	n6	Motor weight (kg)
	OA	OB												
150-280	●	—	min.160M	11	350	985	495	855	360	210	475	600	450	130
			max.225M	45	450	1015	795							320
150-350	—	●	min.180M	18.5	350	985	620							180
			max.280S	75	550	1015	980							562
150-450	●	—	min.200L	30	400	1105	740					700	560	270
			max.315L	200	660	1165	1320							1240
150-570	—	●	min.250M	55	550	1135	895	1060	460	315	575	900	700	427
			max.3552 1)	250	1150	1205	1710							2330
	●	—	min.3553 1)	280				1340				1300		2490
			max.3554 1)	315										2650

1)Voltage of motor is6KV. 2) Z=required size of dismantling rotor

FLUGO reserves the right to change the technical data and dimensions in order to update or improve its product without prior notice.

FAS type pump installation dimension

200-340 to 200-660 (see structural drawing 5) Installation dimension

Rotating direction:CW

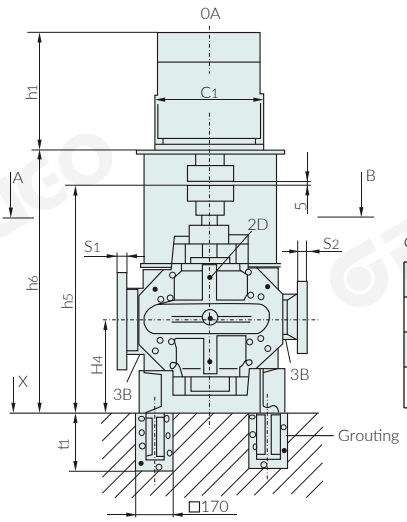

Connecting thread size

1M	piexometer	R1/2
2D	exhaust hole	R1/2
3B	drainage hole	R1/2
4B	drainage hole for leaked liquid	R3/4

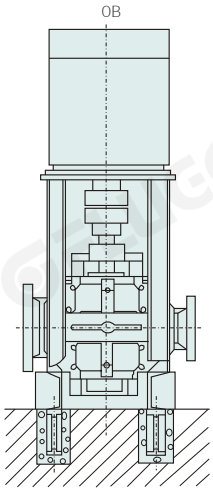

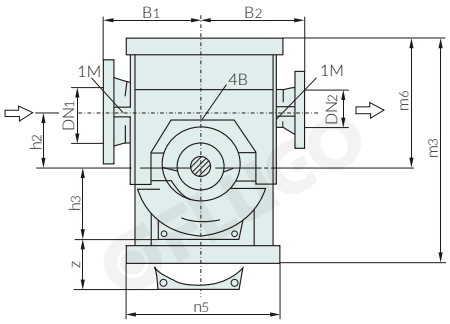

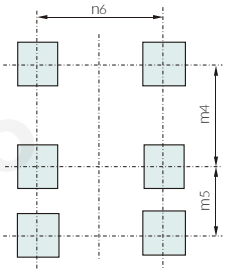

EXTERNAL DIMENSION

Pump type	Flange dimension(mm)				Pump dimension(mm)							Weight (kg)	
	DN 1	DN 2	S 1	S 2	B 1	B 2	h2	h3	h4	h5	z [2]	Pump	Water content
200-340	250	200	32	30	450	450	240	285	400	990	570	590	80
200-410					500	500		310			620	620	95
200-530					600		300	370	440	1095	740	840	115
200-660					650	550	350	430			860	1000	180

MOTOR DIMENSION-Y TYPE MOTOR

Pump type	Structure model		Motor type	Motor power (kw)	c1	h6	h1	m3	m4	m5	m6	n5	n6	Motor weight (kg)
	OA	OB												
200-340	●	—	min.200L	30	400	1105	740	1060	460	315	575	700	560	270
			max.280M	90	550	1135	1030							667
200-410	—	●	min.225S	37	450		770							284
			max.315L	200	660	1165	1320							1240
200-530	●	—	min.280S	75	550	1240	980	1120	520		635	900	700	562
			max.YL3552 [1]	250	1150	1310	1710							2330
	—	●	min.YL3553 [1]	280				1400				1300		2490
			max.YL4002 [1]	400			1850							3000
200-660	●	—	min.315S	-	660	1270	1220	1180	560		685	900		1000
			max.YL3552 [1]	-	1150	1310	1710							2330
	—	●	min.YL3553 [1]	-				1460				1300		2490
			max.YL4005 [1]	-			1850							3240

[1]Voltage of motor is6KV.[2] Z=required size of dismantling rotor

FAS type pump installation dimension

250-390 to 250-610 (see structural drawing 5) Installation dimension

Rotating direction:CW

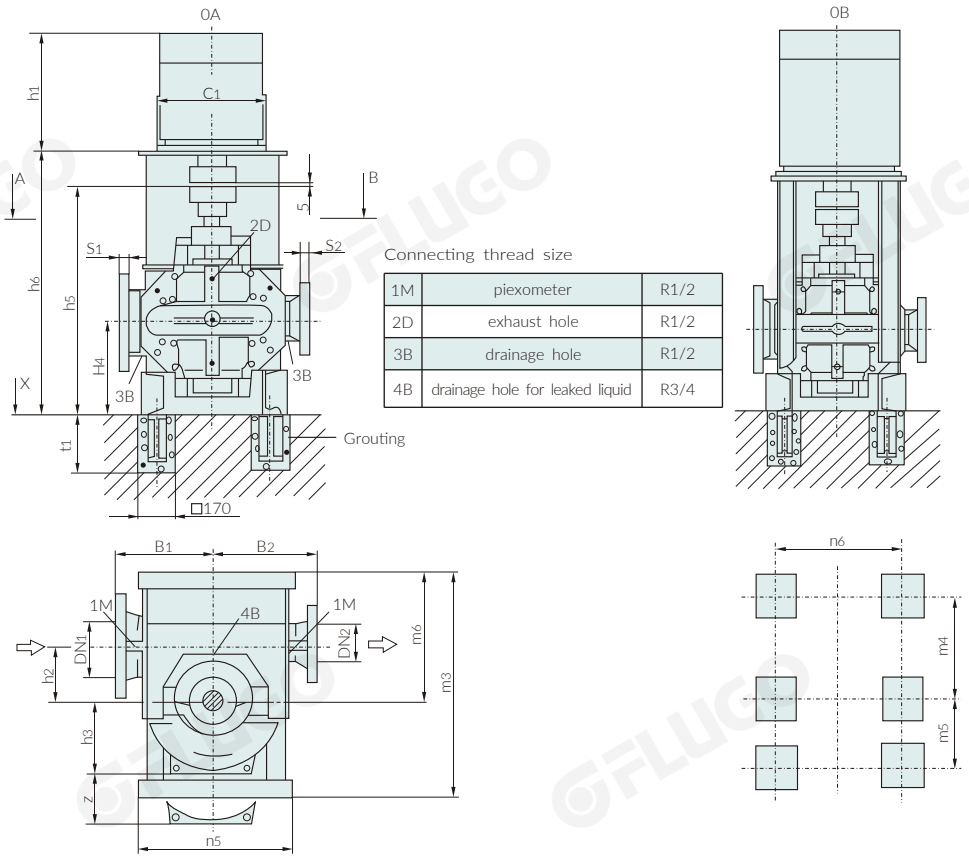

Connecting thread size

1M	piexometer	R1/2
2D	exhaust hole	R1/2
3B	drainage hole	R1/2
4B	drainage hole for leaked liquid	R3/4

EXTERNAL DIMENSION

Pump type	Flange dimension(mm)				Pump dimension(mm)							Weight (kg)	
	DN 1	DN 2	S 1	S 2	B 1	B 2	h2	h3	h4	h5	z [2]	Pump	Water content
250-390	300	250	36	32	500	500	300	320	440	1095	640	810	125
250-470					550	550		355	500	1230	710	930	145
250-610					650		350	415			830	1400	180

MOTOR DIMENSION-Y TYPE MOTOR

Pump type	Structure model		Motor type	Motor power (kw)	c1	h6	h1	m3	m4	m5	m6	n5	n6	Motor weight (kg)
	OA	OB												
250-390	●	—	min.280S	75	550	1240	980	1180	560	315	685	900	700	562
			max.315L	200	660	1270	1320							1240
250-470	—	●	min.280M	90	550	1375	1030							667
			max.YL3552 [1]	250	1150	1445	1710							2330
	●	—	min.YL3553 [1]	280				1460				1300		2490
			max.YL4001 [1]	355			1850							2960
250-610	—	●	min.315M	132	660	1405	1320	1210	590		715	900		1100
			max.YL3552 [1]	250	1150	1445	1720							2330
	●	—	min.YL3553 [1]	280			1710	1490				1300		2490
			max.YL4502 [1]	710	1250		2000							3430

[1]Voltage of motor is6KV.[2] Z=required size of dismantling rotor

FLUGO reserves the right to change the technical data and dimensions in order to update or improve its product without prior notice.

FAS type conjunction flange dimension

300-330 to 300-550 (see structural drawing 5) Installation dimension

Rotating direction:CW

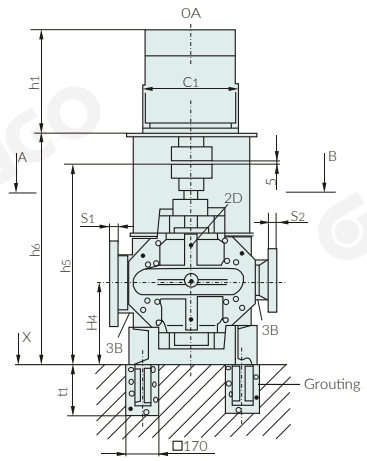

Connecting thread size

1M	piexometer	R1/2
2D	exhaust hole	R1/2
3B	drainage hole	R1/2
4B	drainage hole for leaked liquid	R3/4

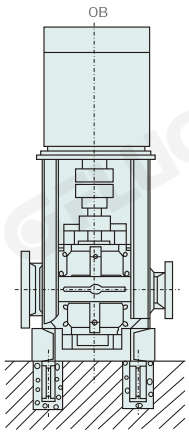

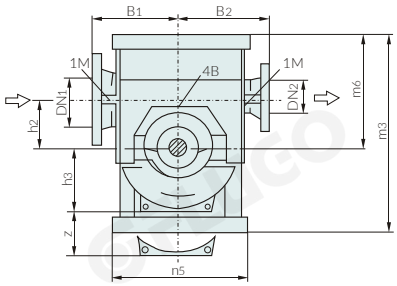

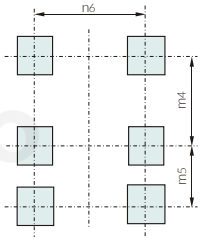

EXTERNAL DIMENSION

Pump type	Flange dimension(mm)				Pump dimension(mm)							Weight (kg)	
	DN1	DN2	S1	S2	B1	B2	h2	h3	h4	h5	z [2]	Pump	Water content
300-330	350	300	40	36	550	500	300	360	440	1095	720	900	100
300-450	400				650	550	350	365	500	1230	730	1400	190
300-550			44		700	650		430	570	1380	860	2097	225

MOTOR DIMENSION-Y TYPE MOTOR

Pump type	Structure model		Motor type	Motor power (kw)	c1	h6	h1	m3	m4	m5	m6	n5	n6	Motor weight (kg)
	OA	OB												
300-330	●	—	min.225S	37	440	1210	1220	1210	590	315	715	900	700	270
			max.315S	110	660	1270								1000
300-450	—	●	min.280M	90	550	1375	1030	1250	630		755			667
			max.YL3552 [1]	250	1150	1445	1710							2330
	●	—	min.YL3553 [1]	280				1530				1300		2490
			max.YL4002 [1]	400			1850							3000
300-550	—	●	min.315L	200	660	1555	1320	1375	670	400	795	1200	950	1240
			max.YL4503 [1]	800	1250	1595	2000							3520

[1] Voltage of motor is6KV. [2] Z=required size of dismantling rotor

FAS type pump installation dimension

350-380 (see structural drawing 5) Installation dimension

Rotating direction:CW

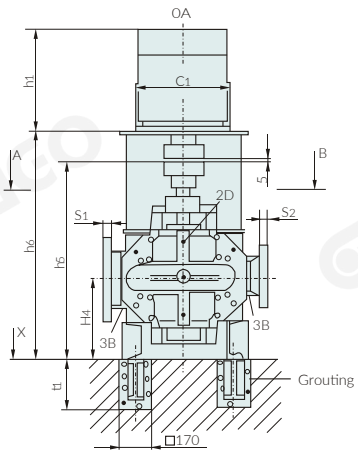

Connecting thread size

1M	piexometer	R1/2
2D	exhaust hole	R1/2
3B	drainage hole	R1/2
4B	drainage hole for leaked liquid	R3/4

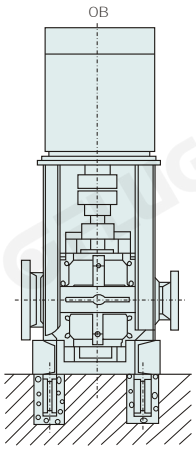

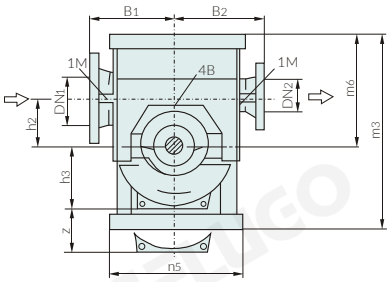

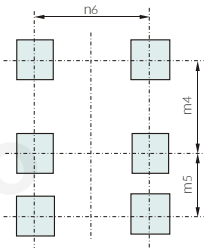

EXTERNAL DIMENSION

Pump type	Flange dimension(mm)				Pump dimension(mm)							Weight (kg)	
	DN1	DN2	S1	S2	B1	B2	h2	h3	h4	h5	z[2]	Pump	Water content
350-380	400	350	44	40	650	550	350	410	500	1230	820	1200	160
350-440					750	650	400	465	570	1380	930	1450	240
350-520					700			420			840	1800	290

MOTOR DIMENSION-Y TYPE MOTOR

Pump type	Structure model		Motor type	Motor power (kw)	c1	h6	h1	m3	m4	m5	m6	n5	n6	Motor weight (kg)
	OA	OB												
350-380	●	—	min.250M	55	550	1375	895	1250	630	315	755	900	700	427
			max.315L	200	660	1405	1320							1220
	—	●	min.YL3551[1]	220	1150	1445	1710	1530				1300		2280
			max.YL3551[1]	220										2280
350-440	●	—	min.315M	132	660	1555	1320	1415	710	400	835	1200	950	1100
			max.YL3552[1]	250	1150	1595	1710							2330
	—	●	min.YL3553[1]	280				1610				1300		2490
			max.YL4003[1]	450			1850							3060
350-520	●	—	min.YL3554[1]	315			1710	1415				1200		2650
			max.YL4503[1]	800	1250		2000							3520

[1] Voltage of motor is6KV. [2] Z=required size of dismantling rotor

FLUGO reserves the right to change the technical data and dimensions in order to update or improve its product without prior notice.

Recommended reservation for 2-years use

Part name	Quantity of pump (including standby pump)							
	1	2	3	4	5	6	8	⩾10
	Quantity of spare parts							
Impeller	-	1	1	2	2	3	3	4
Shaft	-	1	1	2	2	3	3	4
Seal ring (set)	1	1	2	2	3	3	4	5
Bearing body A	1	1	1	2	2	3	4	5
Bearing body B	1	1	1	2	2	3	4	5
Bearing gland (set)	1	1	1	2	2	3	4	5
Bearing baffle ring	-	1	1	2	2	3	3	4
Bearing baffle ring	-	1	1	2	3	4	4	5
Postal pin of clutch (set)	2	4	6	6	8	8	8	10
Water baffle ring	1	1	1	2	2	3	3	5
Bearing (pair)	1	1	2	2	3	4	4	5
Round nut (set)	-	1	1	1	2	2	3	3
Shaft used elastic baffle ring	2	2	2	2	2	4	4	5
Frame oil seal	1	1	1	2	2	3	4	5
O-ring of muff (set)	1	2	3	4	5	6	8	10
O-ring of bearing gland (set)	1	2	3	4	5	6	8	10
O-ring of seal body (set)	1	2	3	4	5	6	8	10
Impeller key	-	?	1	1	1	1	2	2
Clutch key	-	?	1	1	1	1	2	2
Packing seal body (set)	1	1	1	2	2	3	4	6
Packing ring (set)	2	2	2	3	3	3	4	6
Packing muff (set)	2	2	2	3	3	3	4	6
Packing gland (set)	2	2	3	3	4	5	6	6
Packing (set)	2	4	4	5	6	6	8	10
Muff of mechanical seal (set)	2	2	2	3	3	3	4	6
Seal body of mechanical seal (set)	1	1	1	2	2	3	4	5
Gland of mechanical seal (set)	2	2	3	3	4	5	6	6
Baffle ring of mechanical seal (set)	-	1	1	2	2	3	3	4
Mechanical seal (set)	1	1	1	2	2	3	4	6
Fish paper (some)	2	4	4	5	6	7	8	10

It is worth recommending to get spare parts available in order to avoid a shut-down period which is possibly long and of a high cost, especially for an important work of repair.

Notices at order

1.Parameters necessary to be submitted at order:

- Pump model and the flow, head (including the system loss), NPSHr at the point of the desired working condition.
- Type of shaft seal (must be noted either mechanical or packing seal and, if not, delivery of the mechanical seal structure will be made).
- Moving direction of the pump (must be noted in case of a CCW installation and, if not, delivery of a clockwise installation will be made).
- Parameters of the motor (Y series motor of IP44 is generally used as the low-voltage motor with a power <200KW and, when to use a high voltage one, please note its voltage, protective rating, insulation class, way of cooling, power, number of polarity and manufacturer).
- The materials of pump casing, impeller, shaft etc. parts. (delivery with the standard allocation will be made if without being noted).
- Medium temperature (delivery upon a constant-temperature medium will be made if without being noted).
- When the medium to be transported is corrosive or contains solid grains, please note the features of it.

2.Model selection

- The performance parameters listed in the catalog are used for reference for users, without being limited thereby, to select the model only and we can provide users with the right product upon the actual required flow, head and working point.

3.Please contact with Shanghai Liancheng (Group) for technical support in case of a special model selection out of the catalog.

4.Please do not make the basis upon the installation dimension in the catalog when to use a high voltage or a special motor and take the drawing submitted by the headquarter of Shanghai Liancheng as the standard.

FLUGO reserves the right to change the technical data and dimensions in order to update or improve its product without prior notice.

Reference table for pipeline loss

Brief table for the frictional loss of a straight pipe(for evaluation).the lost meters of a 100m straight pipe takes the newly cast iron pipe as the standard and multiple for the old one.

Pipe diameter (mm)	Capacity (L/s)																							
	1	2	4	6	8	10																		
25	32.7	13.0																						
38	3.5	14	55				15	20																
50	0.8	3.1	13	29					25	30														
65		1.6	3.2	7.1	13	20					40	50												
75		0.4	0.8	3.3	5.9	9.6	21.6						60	70										
100			0.23	0.8	1.3	2.1	6.8	8.6	13	19.4					80	90								
125				0.23	0.4	0.63	1.3	2.7	4.1	5.9	10.7						100	110						
150					0.16	0.26	0.58	1.1	1.6	2.3	4.2	6.4	9.4						120	130				
175						0.11	0.27	0.5	0.74	1.05	1.9	2.9	4.3	5.8	7.7	9.6					140	160		
200							0.13	0.26	0.37	0.53	0.93	1.5	2.1	2.9	3.7	4.7	6.1	7.2	8.5				180	200
250								0.07	0.12	0.18	0.30	0.48	0.68	0.93	1.2	1.5	1.9	2.3	2.8	3.3	3.7	4.9	5.2	
300										0.07	0.12	0.19	0.27	0.37	0.49	0.61	0.76	0.9	1.1	1.3	1.5	2.0	2.4	3.0

The length of a straight pipe converted into from both valve and elbow(each)

Variety	Convert into the times of the diameter of a straight pipe	Remark
Standard elbow	12	Multiple in case of unopen
Fully opened gate valve	25	
Back valve	100	
Foot valve	100	Partial block-up multipled

Note: For instance, a 100mm diameter pipe, the foot valve has a 100 X 100=10000mm=10m diameter when which is converted into 100 times that of the pipe's diameter. Suppose the flow is 8L/s, looked into the above table, the loss of the straight pipe is 1.3m each 100m, then the one for 100mm is 0.13m, that is, for a 100mm foot valve with a flow 8L/s, its head loww is 0.13m.

Limit of the maximun flow for a pipe with a certain diameter

Pipeline diameter (mm)	Maximum flow (L/s)	Maximum flow rate (m/s)	Pipeline diameter (mm)	Maximum flow (L/s)	Maximum flow rate (m/s)
25	1	2.04	125	30.0	2.44
38	2.5	1.69	150	43.0	2.45
50	4.17	2.12	175	60.0	2.49
65	6.67	2.01	200	83.3	2.69
75	10.0	2.26	250	133.0	2.72
100	18.4	2.33	300	192.0	2.71

Note: The pipeline loss would be made greatly increased once the limit is over.

FLUGO reserves the right to change the technical data and dimensions in order to update or improve its product without prior notice.

FLUGO

Double-Suction Split Casing Pump

Authorized Distributor